State of Illinois
Department of Transportation
Bureau of Materials
Springfield

POLICY MEMORANDUM

Revised: November 4, 2026 17-08.8
This Policy Memorandum supersedes number 17-08.7 dated September 5, 2025

TO: REGIONAL ENGINEERS AND HIGHWAY BUREAU CHIEFS
PORTLAND CEMENT MANUFACTURERS

SUBJECT: PORTLAND OR BLENDED CEMENT ACCEPTANCE PROCEDURE FOR QUALIFIED AND NON-QUALIFIED PLANTS

1.0 PURPOSE

1.1 To establish procedures whereby **Cement** furnished by a **Manufacturer** or **Supplier** will be accepted for use on **Department** projects.

2.0 SCOPE

2.1 This procedure is available to all **Manufacturers** and **Suppliers** of domestic and foreign **Cements**. However, only **Plants** in North America may apply for **Qualified Plant** status.

3.0 REFERENCES AND AUTHORITY

3.1 **Cements** used on **Department** projects shall meet the material requirements of the **Specifications**.

3.2 Portland **Cements** used on **Department** projects shall meet the standard physical and chemical requirements of **AASHTO** M 85.

3.3 Blended hydraulic **Cements** used on **Department** projects shall meet the standard physical and chemical requirements of **AASHTO** M 240. In the case of blending portland **Cement** and a finely divided mineral, the **Cement** shall be from a **Qualified Plant** and the finely divided mineral shall be from an approved source.

3.4 **Processing Additions** used in the manufacture of **Cements** shall meet the requirements of **ASTM** C 465.

The bill of lading (written or electronic signature) shall state if granulated blast-furnace slag, Class C fly ash, Class F fly ash, or **Cement** kiln dust have been used as a **Processing Addition** in the **Cement**.

3.5 The bill of lading (written or electronic signature) shall state if the **Cement** contains limestone.

3.6 The strength uniformity of the predominant **Cement** manufactured at a **Qualified Plant** shall be reported according to **ASTM** C 917 and a copy of the Uniformity Test Report shall

be delivered to the **Bureau** every 4 months (triannually) for review (See Subsection 6.3). The five-sample moving average of the 7-day strength values shall not vary from an average value, established annually by the **Manufacturer**, by more than ±400 psi (±2760 kPa).

3.7 Sampling devices which are not according to **AASHTO** T 127 may be used, if approved by the **Department**. See Attachment A for current sampling devices approved by the **Department**, which are not according to **AASHTO** T 127.

4.0 DEFINITIONS

AASHTO - American Association of State Highway and Transportation Officials.

AASHTO PRODUCT EVAL AND AUDIT - **AASHTO** Product Evaluation and Audit Solutions.

ACCEPTANCE (ACC) SAMPLE - A sample used for accepting/rejecting **Cement** prior to use on **Department** projects and/or as unassigned stock for use on future projects. The quantity represented by acceptance samples must be given.

AGENT - One who acts for or as the representative of a **Cement** company.

ASTM - American Society for Testing Materials.

BUREAU - Central Bureau of Materials (CBM), Illinois **Department** of Transportation.

CCRL - Cement and Concrete Reference Laboratory.

CEMENT - Portland cement, blended hydraulic cement, or other types of cement.

COMPOSITE SAMPLE - Combined **Grab Samples** taken at prescribed intervals over a period of time.

CONTRACTOR – The individual, firm, partnership, joint venture, or corporation contracting with the **Department** for performance of prescribed work.

DEPARTMENT - Illinois Department of Transportation (IDOT), including its **Districts** and Central Bureau offices.

DISTRICT - District office, Illinois **Department** of Transportation.

ENGINEER - Chief Engineer of the **Department** of Transportation of the **State** of Illinois, or authorized representative as defined in Section 101 of the **Standard Specifications**.

FHWA - Federal Highway Administration.

GRAB SAMPLE - A sample secured from a conveyor, from bulk storage, or from a bulk shipment in one operation.

INDEPENDANT ASSURANCE (IND) SAMPLE - A sample used to provide an independent check on the reliability of the **Manufacturer's** quality control program.

INSPECTOR - The authorized representative of the **Engineer** assigned to make detailed inspection of any or all portions of the work, material, product, etc., as applicable.

INVESTIGATION (INV) SAMPLE - A destination sample used to verify the acceptability of **Cement** from a **Plant**.

MANUFACTURER - A term synonymous with **Producer**.

NIST - National Institute for Standards and Technology.

NON-QUALIFIED PLANT - A **Plant** that ships **Cement** which must be sampled, tested, and approved by the **Bureau** before it is used on **Department** projects.

PLANT - A **Producer's** facility or mill for manufacturing or fabricating products such as **Cement** that are employed on **Department** projects.

PRELIMINARY (PRE) SAMPLE - A sample used to determine, in advance, if the **Cement** will comply with the **Specifications**.

PROCESSING ADDITION - An addition introduced to aid in the manufacture and/or handling of a hydraulic **Cement**. This is according to **ASTM** C 219.

PROCESS CONTROL (PRO) SAMPLE - A sample used for the purpose of controlling production of **Cement** proposed for incorporation into **Department** projects. Note: **ASTM** C 917 samples taken by the **Manufacturer** may be used as **PRO Samples**.

PRODUCER - An individual or business entity providing materials and/or products such as **Cement** for performance of prescribed work.

QUALIFIED PLANT - A **Plant** that is qualified by the **Bureau** to ship **Cement** for immediate use on **Department** projects.

STATE - The state of Illinois.

SPECIALTY CEMENT - Including, but not limited to, rapid hardening cements according to ASTM C 1600, and cements according to ASTM C 1157.

SPECIFICATIONS - Specifications for materials; manufactured, fabricated or constructed items; processes; products; designs; conducted test procedures, etc. which includes the **Standard Specifications**, supplemental **Specifications** and recurring special provisions, highway standards, shop drawings, contract plans, project special provisions, **AASHTO Specifications**, **ASTM Specifications**, etc., as applicable.

STANDARD SPECIFICATIONS - The **Department's** Standard Specifications for Road and Bridge Construction.

SUPPLIER - A company that supplies materials or products such as **Cement** that it does not manufacture or fabricate.

5.0 PORTLAND OR BLENDED CEMENT ACCEPTANCE PROCEDURES

5.1 Approval of **Cement** for use on **Department** projects will be according to one of the three procedures outlined in Subsections 5.1.1, 5.1.2, and 5.1.3.

5.1.1 **Qualified Plant** Procedure. A **Manufacturer** desiring to avoid delays in the sampling, testing, and approval of **Cement** before use on **Department** projects, may, with **Department** approval, qualify a **Plant** to ship **Cement** for immediate use. Requirements for this procedure are contained in Section 6 of this policy memorandum. The **Bureau** will maintain an "Approved/Qualified Producer List of Cement Plants (link embedded)".

The requirements for the **Qualified Plant** Procedure may be modified if the **Department** elects to enter into a reciprocal testing and reporting agreement with another state agency in which the **Plant** is located. A copy of a typical reciprocal agreement with another state is attached (See Attachment B). The **Bureau** will monitor this situation by contacting the host state agency a minimum of once every four months.

5.1.2 **Non-Qualified Plant** Procedure. **Cement** from a **Plant** other than a **Qualified Plant** will be sampled, tested, and approved by the **Bureau** for compliance with the requirements in this policy memorandum, before it is used on **Department** projects. Requirements for this procedure are contained in Section 7 of this policy memorandum.

5.1.3 **Specialty Cement** Procedure. **Specialty Cements** will be accepted by certification on a project specific basis. The **Contractor** shall submit a certification from the **Manufacturer** or an independent lab stating that it meets the requirements of Article 1001.01(d) of the **Specifications** for rapid hardening **Cements** or Article 1001.01(e) of the **Specifications** for other types of cements. For other **Specialty Cements** not covered by the **Standard Specifications**, the **Contractor** shall submit a certification from the **Manufacturer** or an independent lab that either meets the approval of the **Engineer** or states that it meets the requirements of a contract special provision.

6.0 QUALIFIED PLANT PROCEDURE

Plants will be qualified based upon the predominant **Cement** produced. The following procedure references both Type I portland **Cement** and Type IL **Cement** one of which is typically the predominant **Cement** manufactured at a **Plant**. For other **Cement** types, contact the **Bureau** for further information and/or instruction concerning the **Qualified Plant** procedure.

6.1 A **Manufacturer** requesting qualification of a North American **Plant** shall provide the following to the **Bureau**:

1. The **Plant** name and location.

2. A certification that the **Plant** production meets the requirements of Section 3.

3. A 4-month Strength Uniformity Report prepared according to the requirements of **ASTM** C 917, "Standard Test Method for Evaluation of **Cement** Strength Uniformity From a Single Source." For a new **Plant**, the 4-month requirement is waived and all available test information at the time of application shall be provided.

4. A copy of the latest **CCRL** inspection report and proficiency test results for the **Plant's** testing laboratory. This information shall include documentation of resolution of any inspection discrepancies noted by **CCRL** or resolution of unacceptable proficiency test results.

5. The estimated average 3- and 7-day strength levels of Type I **Cement**; or the estimated 3-, 7-, and 28-day strength levels for Type IL **Cement** to be shipped by the **Manufacturer** in the subsequent 12-month period.

6. The type of each **Processing Addition**, and the percent range that will be used in Type I or IL **Cement**. A copy of **ASTM** C 465 test results shall be provided when requested by the **Bureau**.

7. The percent range of limestone that will be used in Type I or IL **Cement**.

8. The equivalent alkalies (Na_2O + 0.658 K_2O) range for the Type I or IL **Cement,** and any other **Cement** to be supplied. The options are ≤ 0.45%, ≤ 0.60%, and > 0.60%.

9. A list of the different types of **Cement** and blended **Cement** manufactured by the **Plant**.

10. A copy of the Safety Data Sheet (SDS) for each **Cement** manufactured by the **Plant**.

At the time of application, the **Manufacturer** shall obtain a 24-hour **Composite Preliminary (PRE) Sample** of Type I or IL **Cement** from current production according to **AASHTO** T 127. The **Manufacturer** shall split the **PRE Sample**. The **Bureau** sample shall be placed in an airtight container and properly identified on form CBM CM01 (link embedded). The **Manufacturer** shall assume the cost to deliver the sample to the **Bureau**. The size of the **Bureau's** portion of the **PRE Sample** shall not be less than 6 lb. (3 kg). The **Manufacturer** shall test the retained portion of the **PRE Sample** for the standard physical and chemical properties listed in **AASHTO** M 85 (Type I) or **AASHTO** M 240 (Type IL), as applicable. When all tests are completed for Type I **Cement**, the **Manufacturer** shall complete form CBM CM02A (link embedded), and deliver the test results to the **Bureau**. When all tests are completed for Type IL **Cement**, the **Manufacturer** shall complete form CBM CM02B (link embedded) and deliver the test results to the **Bureau**.

The **Bureau** will test its portion of the **PRE Sample** for conformance to Section 3. The **Bureau** will compare the results obtained by both laboratories to determine compliance with the allowable difference between two laboratories set forth in the precision statement of each test method. Additional split sample testing will be required if the test results obtained on the **PRE Sample** do not comply with the **Specification** requirements and this policy memorandum.

An **Inspector** from the **Bureau** may conduct a scheduled visit to inspect the laboratory facilities for the **Plant**; the **Plant** manufacturing process; the **Plant** storage facilities; and the quality control policies, procedures, and practices performed at the **Plant**. The **Manufacturer** shall be responsible for payment of transportation, per diem (meals), lodging, and incidental travel costs incurred by the **Bureau Inspector** if the trip from the **Bureau** to the **Plant**, the **Plant** inspection, and the return trip to the **Bureau** cannot be

completed within one day's normal work hours of 8:00 AM to 4:30 PM. Reimbursement for travel costs shall be provided no later than 30 calendar days after receipt of costs submitted by the **Department**.

The **Bureau** will notify the **Manufacturer**, in writing, if the request for qualification is approved or denied. A request may be denied if the **Manufacturer** fails to meet the requirements of Sections 2, 3, 6, or for other reasons determined by the **Department**.

6.2 **Quality Control Requirements for Qualified Plants:**

1. The **Manufacturer** or **Supplier** shall establish and maintain quality control policies and procedures for sampling and testing that are approved by the **Bureau**. The **Bureau** shall be notified of any changes in the **Manufacturer's** or **Supplier's** quality control program.

2. The **Manufacturer's** testing laboratory shall participate in the **CCRL** program of the **NIST**, which includes inspection of facilities and testing of proficiency samples on a regular basis. The **Manufacturer** shall deliver a copy of **CCRL** inspections and proficiency test results to the **Bureau** as soon as they are available, but no later than 30 days after receipt of notification. This information shall include documentation of resolution of any inspection discrepancies noted by **CCRL** or resolution of unacceptable proficiency test results.

3. The **Manufacturer** shall participate in and be in compliance with the **AASHTO Product Eval and Audit** program "Evaluation of Portland & Blended Cement Suppliers" (PBC) for mills. At the time of application for initial qualification, the **Manufacturer** shall have 1 year to begin the **AASHTO Product Eval and Audit** program process.

6.3 **Reporting Requirements for Qualified Plants:**

1. The **Manufacturer** shall deliver a Uniformity Test Report to the **Bureau** every 4-months (triannually). Sampling, testing, and reporting shall be done according to the methods in **ASTM** C 917, "Standard Test Method for Evaluation of Cement Strength Uniformity from a Single Source."

2. The Uniformity Test Report shall be delivered to the **Bureau** no later than 40 calendar days after the end of each 4-month period (i.e., the end of April, August, and December). If the deadline falls on a Saturday, Sunday, or State Holiday, the deadline shall be the next work day.

3. The **Manufacturer** shall provide to the **Bureau**, by January 31st of each year, the estimated average 3- and 7-day strength levels of the Type I **Cement**; or the estimated average 3-, 7-, and 28-day strength levels of the Type IL **Cement** that will be shipped in the subsequent 12-month period.

4. The **Manufacturer** shall provide to the **Bureau**, by January 31st of each year, the type of each **Processing Addition**, and the percent range that will be used in the manufacture of Type I or IL **Cement**.

5. The **Manufacturer** shall provide to the **Bureau**, by January 31st of each year, the percent range of limestone that will be used in the manufacture of Type I or IL **Cement**.

6. The **Manufacturer** shall provide to the **Bureau**, by January 31st of each year, the equivalent alkalies (Na_2O + 0.658 K_2O) range that will be used in the manufacture of Type I or IL **Cement,** and any other **Cement** to be supplied. The options are ≤ 0.45%, ≤ 0.60%, and > 0.60%.

6.4 Record Requirements for Qualified Plants:

1. Records of production control tests shall be maintained by the **Manufacturer** for a minimum period of 5 years, and shall be made available to the **Bureau** upon request.

2. Copies of bills of lading of quantities of **Cement** shipped shall be maintained by the **Manufacturer** for a minimum period of 3 years, and shall be made available to the **Bureau** upon request. At a minimum, bills of lading shall contain the following information:

    a. The type of **Cement**.
    b. The quantity of shipment.
    c. The date of shipment.
    d. The **Manufacturer's** or **Supplier's** name.
    e. The **Manufacturer's Plant** location.
    f. The shipment's point of origin, if different from the **Plant** location.
    g. The shipment's destination.
    h. The consignee's name.
    i. The bill of lading number.

6.5 Sampling and Test Requirements for Qualified Plants:

1. In April, August, and December, unless otherwise specified by the **Bureau**, the **Manufacturer** shall obtain a **Process Control (PRO) Grab Sample** of Type I or IL **Cement**, according to **AASHTO** T 127, which shall be split for testing by the **Manufacturer** and the **Bureau**. The **Bureau** may require that more frequent **PRO Grab Samples** be obtained and tested. These samples may be requested because of a change in **Cement**, variations in test results between the **Bureau** and **Manufacturer**; field test results; or other reasons as determined by the **Bureau**. The split sample shall be taken during the specified month, and shall be delivered to the **Bureau** no later than the last work day of the month. The **Bureau** sample shall be placed in an airtight container and properly identified on form CBM CM01 (link embedded).

    The **Manufacturer** shall assume the cost to deliver the sample to the **Bureau**. The size of the **Bureau's** portion of the **PRO Sample** shall not be less than 6 lb. (3 kg).

2. The **Manufacturer** shall test the retained portion of each **PRO Sample** for the standard physical and chemical properties listed in **AASHTO** M 85 (Type I) or **AASHTO** M 240 (Type IL), as applicable. When all tests are completed for Type I **Cement**, the **Manufacturer** shall complete form CBM CM02A (link embedded) and deliver the test results to the **Bureau** no later than the last work day of the following month from the date of sample. When all tests are completed for Type IL **Cement**,

the **Manufacturer** shall complete form CBM CM02B (link embedded) and deliver the test results to the **Bureau** no later than the last work day of the following month from the date of sample.

3. The test results obtained by the **Manufacturer** and the **Bureau** on all split samples will be compared for compliance with the allowable differences for two different laboratories set forth in the precision statement of each test method and for compliance with Section 3. If significant differences exist in the split sample test results, the **Department** will investigate sampling and test procedures, or require additional comparative sampling to determine the cause of the variation.

6.6 **Department Inspections of Qualified Plants:**

1. An **Inspector** from the **Bureau** may conduct unscheduled visits to each **Qualified Plant** or one of its terminals. During this visit, the **Inspector** will either take or witness the taking of a random **Independent Assurance (IND) Grab Sample** according to **AASHTO** T 127. The **Inspector** will split the sample and deliver an equal portion to the **Manufacturer**. The **Manufacturer** shall test the retained portion of the split sample for the standard physical and chemical properties listed in the **Specifications**. When all tests are completed for Type I **Cement**, the **Manufacturer** shall complete form CBM CM02A (link embedded), and deliver the test results to the **Bureau** no later than the last work day of the following month from the date of sample. When all tests are completed for Type IL **Cement**, the **Manufacturer** shall complete form CBM CM02B (link embedded) and deliver the test results to the **Bureau** no later than the last work day of the following month from the date of sample. The **Bureau** will evaluate the test results obtained on the sample by the **Manufacturer** according to Subsection 6.5.

2. The **Manufacturer** shall be responsible for payment of transportation, per diem (meals), lodging, and incidental travel costs incurred by the **Bureau Inspector** if the trip from the **Bureau** to the **Plant**, the **Plant** inspection, and the return trip to the **Bureau** cannot be completed within one day's normal work hours of 8:00 AM to 4:30 PM. Reimbursement for travel costs shall be provided no later than 30 calendar days after receipt of costs submitted by the **Department**.

3. At the discretion of a **District** or the **Bureau**, random **Investigation (INV) Samples** of **Cement** may be obtained at final destination by a representative of the **Department**. The representative will either take or witness the taking of the **INV Samples**. **INV Samples** will be **Grab Samples** and will be taken according to **AASHTO** T 127. The sampling location for obtaining **INV Samples** will be determined by the **Bureau** in consultation with the **District**. The **Bureau** will use **INV Samples** to verify that **Cement** shipped from **Qualified Plants** meets the requirements of Section 3.

6.7 **Disqualification of Qualified Plants:**

1. Failure of a **Qualified Plant** to meet the requirements of Sections 3 and 6 of this policy memorandum will be sufficient cause for disqualification. The occurrence of two late submittals in a twelve month period for any of the following: Uniformity Test Report, **PRO Sample**, or **PRO** test results; will result in a meeting with the **Manufacturer**. The **Manufacturer** will be given an opportunity to submit a plan for corrective action. Failure to correct the late submittal problem will result in disqualification. A late

submittal will be based on the postmark date. If there is no postmark date, a late submittal will be based on date of receipt by the **Bureau**.

2. Failure to resolve significant differences in testing, as indicated by the test results obtained on **PRO** or **IND Samples** split with the **Manufacturer**, will be sufficient cause for disqualification.

3. Failure to satisfactorily resolve the discrepancies in the **Manufacturer's** test equipment or test procedures noted by the **CCRL** assessor in the report will be sufficient cause for disqualification.

4. Failure to remain in compliance with the **AASHTO Product Eval and Audit** program "Evaluation of Portland & Blended Cement Suppliers" for mills will be sufficient cause for disqualification.

5. When a **Plant** has been disqualified, the **Department** will notify the **Manufacturer** in writing.

6. The **Manufacturer** may re-apply for **Qualified Plant** status any time after disqualification. However, a minimum of 28 days shall have elapsed from the date of disqualification before reinstatement will be considered. The actual date of reinstatement is subject to the determination of the **Engineer** that the problem or problems have been corrected.

7.0 NON-QUALIFIED PLANT PROCEDURE

7.1 The following procedure references both Type I portland **Cement** and Type IL **Cement** one of which is typically the predominant **Cement** produced by the **Non-Qualified Plant**. For other **Cement** types, contact the **Bureau** for further information and/or instruction concerning the **Non-Qualified Plant** procedure. A **Manufacturer** or **Supplier** requesting approval of **Cement** from a **Non-Qualified Plant** shall provide the following to the **Bureau**:

1. **Manufacturer** name.

2. **Plant** name and location.

3. A copy of the latest **CCRL** inspection report and proficiency test results for the testing laboratory to be used by the **Manufacturer** or **Supplier**. Otherwise, the **Manufacturer** or **Supplier** shall provide documentation for review that shows the testing laboratory has implemented a quality control and management system which is acceptable to the **Bureau**.

4. A current test report, in English, which indicates the standard physical and chemical composition of the **Cement** as per Section 3.

5. The type of each **Processing Addition**, and the percent range that will be used in Type I or IL **Cement**. The percent range of limestone that will be used in Type I or IL **Cement**. The **Manufacturer** or **Supplier** shall immediately notify the **Bureau** of any changes in the **Processing Additions** or their percentages, and any change in the limestone percentage.

6. The transportation method and location at which an **Inspector** from the **Bureau** will be able to obtain **Acceptance (ACC) Samples**.

7. If requested by the **Bureau**, the **Manufacturer** or **Supplier** shall deliver to the **Bureau** a 24-hr **Composite Preliminary (PRE) Sample** of **Cement** from current shipments according to **AASHTO** T 127. The **Manufacturer** shall split the **PRE Sample**. The **Bureau** sample shall be placed in an airtight container and properly identified on form CBM CM01 (link embedded). The **Manufacturer** or **Supplier** shall assume the cost to deliver it to the **Bureau**. The size of the **PRE Sample** shall not be less than 6 lb. (3 kg).

   The **Manufacturer** or **Supplier** shall test the retained portion of the **PRE Sample** for the standard physical and chemical properties listed in the applicable **Specification** in Section 3. When all tests are completed for Type I **Cement**, the **Manufacturer or Supplier** shall complete form CBM CM02A (link embedded) , and deliver the test results to the **Bureau.** When all tests are completed for Type IL **Cement**, the **Manufacturer** shall complete form CBM CM02B (link embedded) and deliver the test results to the **Bureau**.

   The **Bureau** will test its portion of the **PRE Sample** for conformance to Section 3. The **Bureau** will compare the results obtained by both laboratories to determine compliance with the allowable difference between two laboratories set forth in the precision statement of each test method. Additional split sample testing will be required if the test results obtained on the **PRE Sample** do not comply with the **Specification** requirements and this policy memorandum.

7.2 **Sampling and Test Requirements for Non-Qualified Plants in North America:**

1. **Cement** from a **Non-Qualified Plant** will be sampled, tested, and approved by the **Bureau** before use on **Department** projects. The **Bureau** has the option to affix a seal to secure **Cement** in storage (i.e. silo, truck, railroad car, or barge) until the **Bureau's** testing is completed.

2. Upon arrival of the **Cement** to Illinois, an **Inspector** from the **Bureau** will obtain **Acceptance (ACC) Grab Samples** according to **AASHTO** T 127. The **Bureau** will determine the number of representative samples required. The samples will be split by the **Inspector** with the **Manufacturer** or **Supplier** retaining one portion of each.

3. The **Manufacturer** or **Supplier** may request the **Bureau** to sample the **Cement** prior to arrival in Illinois. In the event the request is approved, the **Manufacturer** or **Supplier** shall be responsible for payment of transportation, per diem (meals), lodging, and incidental travel costs incurred by the **Bureau Inspector** if the trip from the **Bureau** to the **Cement** location, the sampling, and the return trip to the **Bureau** cannot be completed within one day's normal work hours of 8:00 AM to 4:30 PM. Reimbursement for travel costs shall be provided no later than 30 calendar days after receipt of costs submitted by the **Department**. If the **Department** determines that it lacks the resources to accomplish out-of-state inspection, the **Cement** may be sampled and tested according to the procedures in Subsection 7.3.

4. **Acceptance (ACC) Samples** will be tested by the **Bureau**, and **Manufacturer** or **Supplier** according to Subsection 7.1 Item 7 in order to approve the **Cement** for use on **Department** projects.

5. At the discretion of a **District** or the **Bureau**, random **Investigation (INV) Samples** of **Cement** may be obtained at final destination by a representative of the **Department**. The representative will either take or witness the taking of the **INV Samples**. **INV Samples** will be **Grab Samples** and will be taken according to **AASHTO** T 127. The sampling location for obtaining **INV Samples** will be determined by the **Bureau** in consultation with the **District**. The **Bureau** will use **INV Samples** to verify that the **Cement** shipped meets the requirements of Section 3.

7.3 **Sampling, Test, and AASHTO Product Eval and Audit Requirements for Non-Qualified Plants Located Outside North America:**

1. The **Manufacturer** or **Supplier** shall participate in and be in compliance with the **AASHTO Product Eval and Audit** program "Evaluation of Portland & Blended Cement Suppliers" (PBC) for terminals located in Illinois. At the time of an initial delivery to a terminal in Illinois, the **Manufacturer** or **Supplier** shall have 1 year to begin the **AASHTO Product Eval and Audit** program process for terminals.

2. At the port of entry, an **Agent** of the importer shall obtain a **Preliminary (PRE) Composite Grab Sample** according to **AASHTO** T 127 from each of the vessel's holds containing foreign **Cement**. The **Agent** shall split each vessel **Composite Sample** and mail one portion to the **Bureau**. The other portion shall be mailed to the importer's testing laboratory. The **Bureau** sample shall be placed in an airtight container and properly identified on form CBM CM01 (link embedded). The size of each **PRE Sample** shall not be less than 6 lb. (3 kg).

3. An **Agent** of the importer shall obtain a minimum of one **Acceptance (ACC) Grab Sample** according to **AASHTO** T 127 from each barge of foreign **Cement** destined for Illinois. The **Agent** shall split each barge **Grab Sample** and mail one portion to the **Bureau**. The other portion shall be mailed to the importer's testing laboratory. Sample containers, identification and size shall be the same as that detailed in item 1 above.

4. The importer of the **Cement** shall be responsible for all sampling and mailing costs.

5. The importer's laboratory shall test its portion of each vessel and barge sample for the standard physical and chemical requirements of the applicable **Specifications** (Notes 1 and 2).

6. Upon completion of the tests, the importer shall deliver to the **Bureau** a certification and report that states the **Cement** in the vessel unloaded at the port of entry and the **Cement** loaded onto each barge destined for Illinois has been tested by the importer, and complies with the applicable **Specifications**. As part of the report for Type I **Cement**, the importer shall complete form CBM CM02A (link embedded) for each vessel and barge sample tested. As part of the report for Type IL **Cement**, the importer shall complete form CBM CM02B (link embedded) for each vessel and barge sample tested. The report shall also include for all vessel samples: the name of the vessel, the source of the **Cement**, each sample's hold number, the date the vessel arrived at the port of entry, and the date the sample was taken. In addition, the report shall

include for all barge samples: the barge number, the date the sample was taken, and the quantity of **Cement** in the barge.

7. The importer shall immediately notify the **Bureau** if a vessel or barge sample fails to meet the applicable **Specification** requirements.

8. The **Bureau** will review the certification and report and compare the importer's test data to the test data obtained by the **Bureau** on its portion of each split sample.

9. When the certification and report is examined and determined to be correct, the **Bureau** will notify the importer and the **District**s that the **Cement** is approved for state projects.

10. Random **Investigation (INV) Samples**, from one or more barges, may be taken by a **Department Inspector** when the barges arrive at the Illinois terminal(s). **INV Samples** will be **Grab Samples** and will be taken according to **AASHTO** T 127**.** The **Bureau** will use **INV Samples** to verify that the **Cement** meets the requirements of the **Specifications**.

11. The **Department** will reject any foreign **Cement** tested by the **Bureau**, or the importer, that does not meet the **Specification** requirements. For split samples where one party is within **Specification** and the other party is out of **Specification**, the **Cement** will be considered out of **Specification** and will be rejected unless the failing test is determined to be flawed by the **Bureau**.

12. Exceptions to the procedures above will be considered for **Cements** that have an acceptable quality history, and have previously been approved by the **Department**.

13. Requests for reduced sampling and testing of **Cement** in particular vessels shall be directed to the **Bureau** for approval.

    Note 1. Type I **Cements** to be certified by the importer as meeting the physical requirements of **AASHTO** M 85 shall be tested for normal consistency, air content, Vicat time of set, Blaine fineness, and 3- and 7-day compressive strength. Type IL **Cements** to be certified by the importer as meeting the physical requirements of **AASHTO** M 240 shall be tested for normal consistency; air content; Vicat time of set; Blaine fineness; 3-, 7-, and 28-day compressive strength; percent passing the #325 (45µm) sieve; and specific gravity.

    Note 2. There are cases where the optimum sulfur trioxide (using **ASTM** Test Method C 563) of a **Cement** exceeds the applicable **Specification** limit. In such cases, it is permissible to exceed the **Specification** limit, provided it has been demonstrated (by **ASTM** Test Method C 1038) that the increased sulfur trioxide will not develop expansion in water exceeding 0.020% at 14 days. The importer shall deliver supporting test data to the **Bureau** for each vessel of **Cement** supplied, under this provision, to the **Bureau**.

8.0 ACCEPTANCE OF CEMENT

8.1 **Cement** will be accepted according to the **Specifications** and this policy memorandum.

8.2 The **Bureau** will maintain an "Approved/Qualified Producer List of Cement Plants (link embedded)" on the internet, which will indicate the **Qualified Plants** that meet the requirements of this policy memorandum. This list will include the name, location, and **Producer/Supplier** Number of each **Qualified Plant**. The list will also include the different types of portland **Cement** and blended **Cement** manufactured by the **Plant**. Other information as appropriate will also be provided on the list. These **Plants** may ship **Cement** for immediate use on **Department** projects.

8.3 **Cement** from **Non-Qualified Plants** will be sampled, tested, and approved by the **Bureau** before use on **Department** projects.

8.4 **Cement** from foreign plants will be accepted according to the procedures in Subsection 7.3.

8.5 **Specialty Cements** will be accepted according to the procedures in Subsection 5.1.3.

9.0 REJECTION OF CEMENT

9.1 **Cement** that fails to conform to the requirements of Section 3 of this policy memorandum shall be rejected for use on **Department** projects.

9.2 The **Bureau** will notify the **Manufacturer** or **Supplier** when **Cement** is rejected for use on **Department** projects.

10.0 CLOSING NOTICE

Archived versions of this policy memorandum may be examined by contacting the **Bureau**.

The current **Bureau** Chief of Materials has approved this policy memorandum. Signed documents are on file with the **Bureau**.

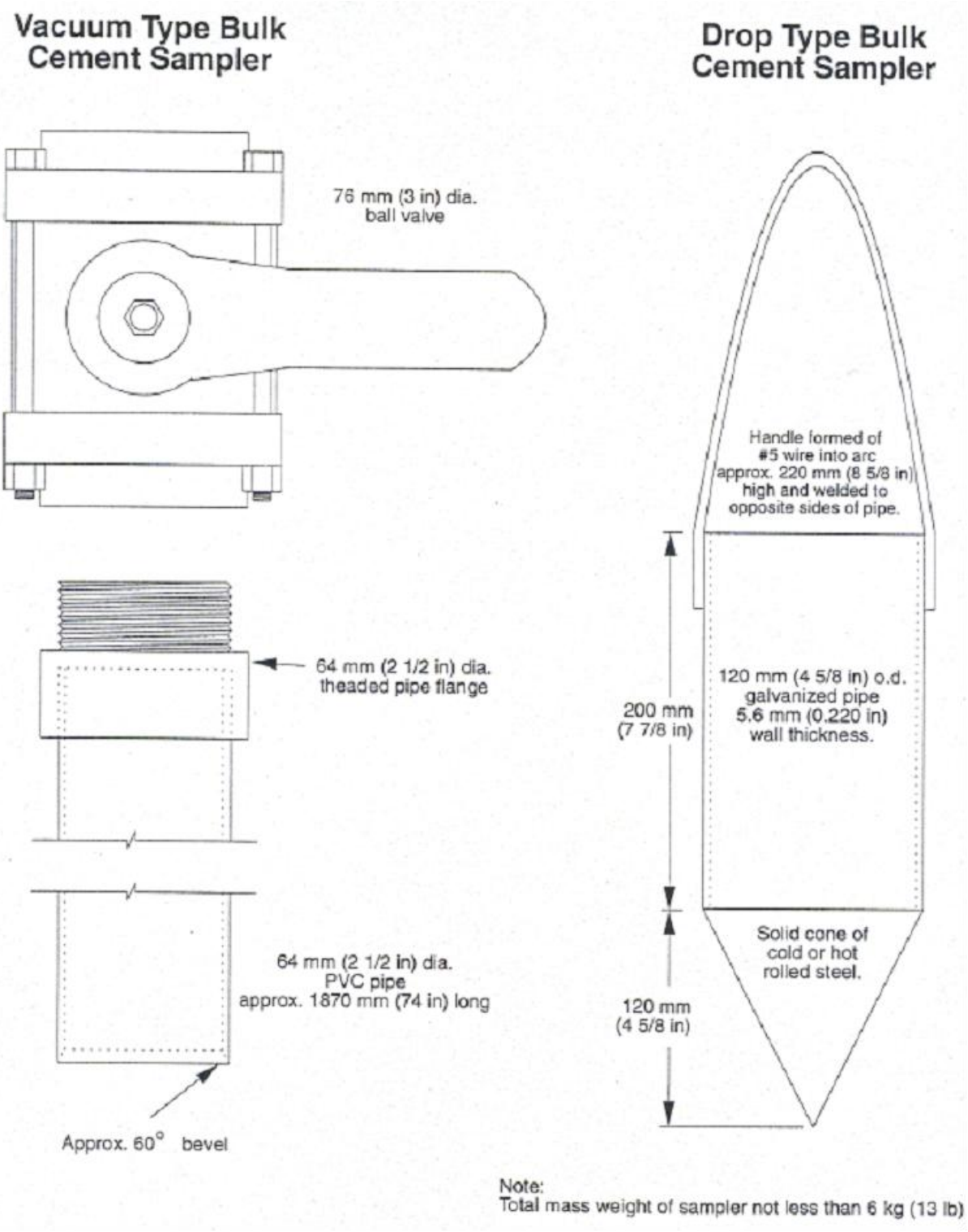
Vacuum Type Bulk Cement Sampler
76 mm (3 in) dia. ball valve
64 mm (2 1/2 in) dia. theaded pipe flange
64 mm (2 1/2 in) dia. PVC pipe approx. 1870 mm (74 in) long
Approx. 60° bevel
Drop Type Bulk Cement Sampler
Handle formed of #5 wire into arc approx. 220 mm (8 5/8 in) high and welded to opposite sides of pipe.
120 mm (4 5/8 in) o.d. galvanized pipe 5.6 mm (0.220 in) wall thickness.
200 mm (7 7/8 in)
Solid cone of cold or hot rolled steel.
120 mm (4 5/8 in)
Note:
Total mass weight of sampler not less than 6 kg (13 lb)

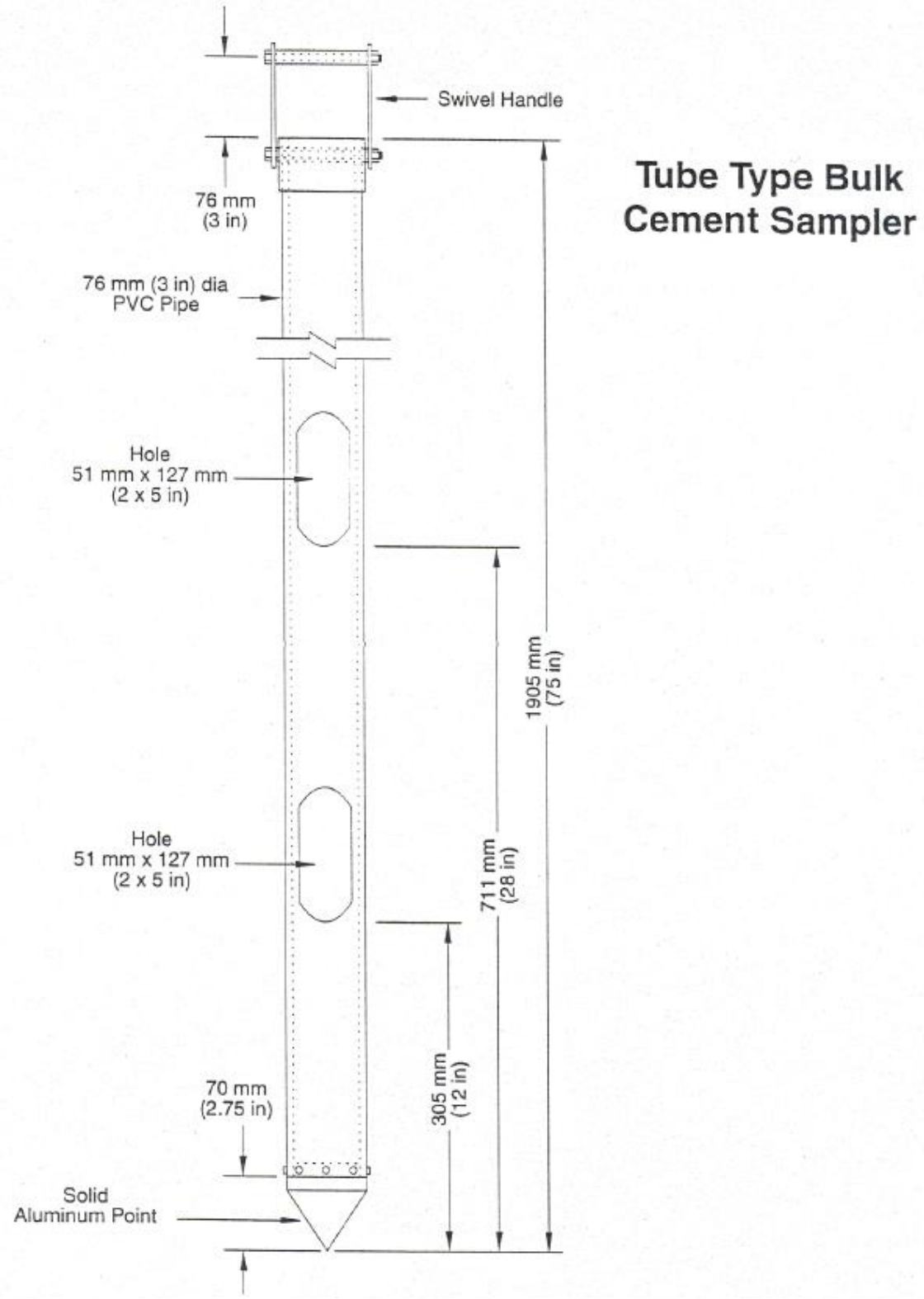

Tube Type Bulk Cement Sampler

ARTICLES OF AGREEMENT
FOR
CEMENT PLANT ACCEPTANCE

BETWEEN THE STATE OF _____
AND THE STATE OF _____

FOR CEMENT FROM: _____CEMENT COMPANY

FACILITY LOCATED AT: _____

1. The host state agency will require the cement plant within its boundaries to have a laboratory compliant with ASTM C 1222. This lab will perform testing on the applicable type of cement (AASHTO M 85 / ASTM C 150, AASHTO M 240 / ASTM C 595, and ASTM C 1157) produced and shipped for state contracts. AASHTO accreditation for hydraulic cement testing of the applicable cement types is acceptable. Agency laboratories used for verification testing must meet the same criteria.

2. The host state agency will require the cement plant within its boundaries to have a printed, agency acceptable quality control plan for the production of cements used by state agencies. The plan must include commitments to comply with ASTM C 1222 and AASHTO T 127 / ASTM C183. The host state agency will verify compliance with the quality control plan.

3. The host state agency will require the cement plant within its boundaries to be in compliance with the AASHTO Product Evaluation and Audit Solutions program “Evaluation of Portland & Blended Cement Suppliers” for mills.

4. The host state agency will require the cement producer to maintain and provide, for each lot (silo) of cement shipped, a compilation of mill test reports in an electronic form (Excel spreadsheet). The applicable data will be provided to the host state agency at least semiannually.

5. The host state agency will require the cement producer to submit split samples for all cements produced by the plant, which shall include portland cement according to (AASHTO M 85 / ASTM C150), blended portland cement according to (AASHTO M 240 / ASTM C 595), and performance specification cement according to (ASTM C 1157). The split samples shall be submitted at least semiannually for verification testing.

6. The host state agency will require the cement producer to submit reports for ASTM C 917 for each cement produced at least semiannually.

7. The host state agency will require the cement producer to maintain production and quality control records for at least seven years and make those records available if requested.

8. The host state agency will review submittals from the cement producer along with agency test results. If deficiencies are discovered, the state agency will monitor corrective actions taken

by the producer until the deficiencies are corrected. The reciprocal agreement state agency will be notified of the deficiencies and of each occurrence.

9. Any test results or submittals collected by the host state agency may be made available to the reciprocal agreement state agency upon request.

10. All cement plant information and data is confidential within the limits of a public agency and is for state agencies information and inspection only.

11. Quality assurance test results of field samples, performed by a reciprocal state, shall be reported to the host state agency when a non-compliance occurs. The reciprocal state agency will deal directly with the cement producer. The host state agency will take action as described in Item 7. The host state agency shall notify all reciprocal agreement state agencies when a non-compliance occurs.

12. Cement tests or requirements beyond the standards stated above may be provided to reciprocal state agencies by agreement between the host state agency and reciprocal state agencies.

Materials Engineer: _____ State of _____
Date_____

Materials Engineer: _____ State of _____
Date_____