State of Illinois
Department of Transportation
Bureau of Materials
Springfield

POLICY MEMORANDUM

Revised: November 4, 2026 18-08.8
This Policy Memorandum supersedes number 18-08.7 dated March 7, 2025

TO: REGIONAL ENGINEERS AND HIGHWAY BUREAU CHIEFS
MANUFACTURERS AND SUPPLIERS OF FINELY DIVIDED MINERALS

SUBJECT: ACCEPTANCE PROCEDURE FOR FINELY DIVIDED MINERALS USED IN CONCRETE AND OTHER APPLICATIONS

1.0 PURPOSE

To establish procedures whereby materials of mineral origin, furnished by a **Manufacturer** or **Supplier**, will be accepted for use on **Department** projects.

2.0 SCOPE

This procedure is available to all **Manufacturers** or **Suppliers** of domestic and foreign **Finely Divided Minerals**. However, only **Sources** in North America may apply for **Approved Source** status.

3.0 REFERENCES AND AUTHORITY

3.1 **Finely Divided Minerals** used on **Department** projects shall meet the material requirements of the **Specifications**.

3.2 **Fly Ash** used on **Department** projects shall meet the standard physical and chemical requirements of **AASHTO** M 295.

3.3 **Microsilica** used on **Department** projects shall meet the standard physical and chemical requirements of **AASHTO** M 307.

3.4 **High-Reactivity Metakalin** used on **Department** projects shall meet the standard physical and chemical requirements of **AASHTO** M 321, except the fineness shall be a maximum 15% retained on the No. 325 (45 μm) sieve.

3.5 **Ground Granulated Blast-Furnace Slag** used on **Department** projects shall meet the standard physical and chemical requirements of **AASHTO** M 302, for Grade 100 or Grade 120 material.

3.6 **Blended Finely Divided Minerals** used on **Department** projects shall meet **ASTM** C 1697 and will be classified according to its predominant **Finely Divided Mineral** constituent or as designated by the **Manufacturer**. **Blended Finely Divided Minerals** shall meet the chemical requirements of its predominant constituent or designated classification, and its individual constituent **Finely Divided Minerals** will not be required

to conform to their applicable standard as long as the blended product meets the chemical requirements of its classification.

3.7 **Dry Expansive Component** used on **Department** projects shall meet the standard physical and chemical requirements of **ASTM** C 806. The minimum restrained expansion shall be 0.04 percent at seven days as determined according to **ASTM** C 806. The maximum restrained expansion shall be 0.18 percent.

3.8 Sampling devices which are not according to **ASTM** C 311 may be used, if approved by the **Department**. See Attachment A for current sampling devices approved by the **Department**, which are not according to **ASTM** C 311.

4.0 DEFINITIONS

AASHTO - American Association of State Highway and Transportation Officials.

ACCEPTANCE (ACC) SAMPLE - A sample used for accepting/rejecting a **Finely Divided Mineral** prior to use on **Department** projects and/or as unassigned stock for use on future projects. The quantity represented by acceptance samples must be given.

AGENT - One who acts for or as the representative of a **Finely Divided Mineral** company.

APPROVED SOURCE - A source that is approved by the **Bureau** to ship a **Finely Divided Mineral** for immediate use on **Department** projects.

ASTM - American Society for Testing Materials.

BLENDED FINELY DIVIDED MINERAL - a blended finely divided mineral shall be the product resulting from the blending or intergrinding of two or three **finely divided minerals**. For simplicity herein, the term **Finely Divided Mineral** will also apply to **Blended Finely Divided Mineral** products, except when otherwise indicated.

BUREAU - Central Bureau of Materials (CBM), Illinois **Department** of Transportation.

CCRL - Cement and Concrete Reference Laboratory.

CEMENT - Portland cement.

COMPOSITE SAMPLE - Combined **Grab Samples** taken at prescribed intervals over a period of time.

DEPARTMENT - Illinois Department of Transportation (IDOT), including its **Districts** and Central Bureau offices.

DISTRICT - District office, Illinois **Department** of Transportation.

DRY EXPANSIVE COMPONENT - A Type G or K dry expansive component as defined in ACI 223R. Per **Department Specifications**, the material is mixed with Type I or II **Cement** and water to produce a paste that increases in volume and makes shrinkage-compensating concrete. **Finely Divided Minerals** may also be used in the concrete mixture.

ENGINEER - Chief Engineer of the **Department** of Transportation of the **State** of Illinois, or authorized representative as defined in Section 101 of the **Standard Specifications**.

FHWA - Federal Highway Administration.

FINELY DIVIDED MINERAL - A finely divided material which has cementitious or pozzolanic properties. Examples are **Fly Ash**, **Microsilica (Silica Fume)**, **Ground Granulated Blast-Furnace (GGBF) Slag**, **High-Reactivity Metakaolin (HRM)**, and **Dry Expansive Component Materials** Type G or K. For simplicity herein, the term **Finely Divided Mineral** will also apply to **Blended Finely Divided Mineral** products, except when otherwise indicated.

FLY ASH - A finely divided residue that results from the combustion of ground or powdered coal, transported from the combustion chamber by exhaust gas, collected by mechanical or electrical means, and stored in stockpiles or bins.

GRAB SAMPLE - A sample secured from a conveyor, from bulk storage, or from a bulk shipment in one operation.

GROUND GRANULATED BLAST-FURNACE (GGBF) SLAG - A glassy granular material, formed when molten blast-furnace slag is rapidly chilled, and then finely ground.

HIGH-REACTIVITY METAKAOLIN (HRM) - A reactive aluminosilicate pozzolan formed by calcining purified kaolinite at a specific temperature range.

INDEPENDANT ASSURANCE (IND) SAMPLE - A sample used to provide an independent check on the reliability of the **Manufacturer's** or **Supplier's** quality control program.

INSPECTOR - The authorized representative of the **Engineer** assigned to make detailed inspection of any or all portions of the work, material, product, etc., as applicable.

INVESTIGATION (INV) SAMPLE - A destination sample used to verify the acceptability of a **Finely Divided Mineral** from a **Source**.

ISO 9000 OR 14000 SERIES - A program of international quality management system standards developed by the International Organization for Standardization (ISO).

MANUFACTURER - A term synonymous with **Producer**.

MICROSILICA - An amorphous silica of high silica content and purity possessing high pozzolanic activity.

NIST - National Institute for Standards and Technology.

PRELIMINARY (PRE) SAMPLE - A sample used to determine, in advance, if the **Finely Divided Mineral** will comply with the **Specifications**.

PROCESS CONTROL (PRO) SAMPLE - A sample used for the purpose of controlling production of a **Finely Divided Mineral** proposed for incorporation into **Department** projects.

PRODUCER - An individual or business entity providing materials and/or products such as a **Finely Divided Mineral** for performance of prescribed work.

REFERENCE MATERIAL - A **Cement** used for the control mortar and corresponding test mortars, of a **Finely Divided Mineral**, to determine its strength activity index.

SOURCE - The name and location of the manufacturing process from which a **Finely Divided Mineral** is obtained.

STATE - The state of Illinois.

SPECIFICATIONS - Specifications for materials; manufactured, fabricated or constructed items; processes; products; designs; conducted test procedures, etc. which includes the **Standard Specifications**, supplemental **Specifications** and recurring special provisions, highway standards, shop drawings, contract plans, project special provisions, **AASHTO Specifications**, **ASTM Specifications**, etc., as applicable.

STANDARD SPECIFICATIONS - The **Department's** Standard Specifications for Road and Bridge Construction.

SUPPLIER - A company that supplies materials or products such as a **Finely Divided Mineral** that it does not manufacture or fabricate.

UNAPPROVED SOURCE - A source that ships a **Finely Divided Mineral** which must be sampled, tested, and approved by the **Bureau** before it is used on **Department** projects.

5.0 FINELY DIVIDED MINERAL ACCEPTANCE PROCEDURES

5.1 Approval of **Finely Divided Minerals** for use on **Department** projects will be according to one of the two procedures outlined in Subsections 5.1.1 and 5.1.2.

5.1.1 **Approved Source** Procedure. A **Manufacturer or Supplier** desiring to avoid delays in the sampling, testing, and approval of a **Finely Divided Mineral** before use on **Department** projects, may, with **Department** approval, qualify a **Source** to ship a **Finely Divided Mineral** for immediate use. Requirements for this procedure are contained in Section 6 of this policy memorandum. The **Bureau** will maintain the Qualified Producer List Finely Divided Minerals.

5.1.2 **Unapproved Source** Procedure. A **Finely Divided Mineral** from a **Source** other than an **Approved Source** will be sampled, tested, and approved by the **Bureau** for compliance with the requirements in this policy memorandum, before it is used on **Department** projects. Requirements for this procedure are contained in Section 7 of this policy memorandum.

6.0 APPROVED SOURCE PROCEDURE

6.1 A **Manufacturer** or **Supplier** requesting **Source** approval of a **Finely Divided Mineral** shall provide the following to the **Bureau**:

1. The **Manufacturer**'s or **Supplier**'s name and location.

2. The **Source** name, location (station), and number of generating units. If a **Blended Finely Divided Mineral**, then **Source** information for each of its constituent **Finely Divided Minerals**.

3. The name of the **Finely Divided Mineral** and its class, grade, or type. If a **Blended Finely Divided Mineral**, then its predominant class, grade, or type or as assigned by the **Manufacturer**.

4. A certification that the **Finely Divided Mineral** meets the applicable requirements of Section 3. If a Blended Finely Divided Mineral, then it shall be certified according to its predominant constituent or designated classification.

5. A 4-month testing history. For a new **Source** or when the **Supplier** for the **Source** is changed, the 4-month requirement is waived and all available test information at the time of application shall be provided.

6. A copy of the **Manufacturer's** or **Supplier's** quality control program.

7. A copy of the last **CCRL** inspection report of the testing laboratory used by the **Manufacturer** or **Supplier** of **the Finely Divided Mineral,** with documentation of resolution of any discrepancies noted therein. The **Manufacturer** or **Supplier** of **HRM**, **Microsilica**, or **Dry Expansive Component** shall provide a copy of the testing laboratory's **CCRL** inspection report and/or an **ISO 9000 or 14000 Series** certificate. For an alternative quality system program approved by the **Bureau**, a certificate or other documentation shall be provided.

8. A copy of the Safety Data Sheet (SDS) for the **Finely Divided Mineral**.

At the time of application, the **Manufacturer** or **Supplier** shall obtain a **Preliminary (PRE) Grab Sample** of the **Finely Divided Mineral** from current production according to **ASTM** C 311. However, this shall not apply to **Dry Expansive Component**. If sampling a **Blended Finely Divided Mineral**, **PRE Grab Samples** of each constituent **Finely Divided Mineral** shall also be obtained. The **Manufacturer** or **Supplier** shall split the **PRE Sample** and place one portion in an airtight container and deliver it to the **Bureau**. A sample of the **Reference Material** used by the **Manufacturer** or **Supplier** for testing shall be included. The **Manufacturer** or **Supplier** shall assume the cost to deliver the samples to the **Bureau**. The size of the **Bureau's** portion of the **PRE Sample** and the **Reference Material** shall not be less than 6 lb. (3 kg) each and the samples shall be properly identified on form CBM CM01. The **Manufacturer** or **Supplier** shall test the retained portion of the **PRE Sample** for the standard physical and chemical properties listed in the applicable **Specification** in Section 3. When all tests are completed, the **Manufacturer** or **Supplier** shall complete form CBM CM20 for **Fly Ash**, CBM CM21 for **GGBF Slag**, CBM CM22 for **Microsilica**, or CBM CM23 for **HRM**, as applicable, and deliver the test results to the **Bureau**. For a **Blended Finely Divided Mineral**, use the

form applicable to the product's predominant constituent or designated classification, and report each constituents' results on its applicable form.

The **Bureau** will test its portion of the **PRE Grab Sample** with the **Reference Material** for conformance to Section 3. The **Bureau** will compare the results obtained by both laboratories to determine compliance with the allowable difference between two laboratories set forth in the precision statement of each test method. Additional split sample testing will be required if the test results obtained on the **PRE Grab Sample** do not comply with the **Specification** requirements and this policy memorandum.

At the time of application for **Dry Expansive Component**, the **Manufacturer** or **Supplier** shall submit a report prepared by an independent laboratory inspected by **CCRL**. The report shall show the results of **ASTM** C 806 conducted no more than five years prior to the time of submittal. The **Dry Expansive Component** shall be used in combination with Type I, IL, or II **Cement**. The minimum restrained expansion shall be 0.04 percent at seven days as determined according to **ASTM** C 806. The maximum restrained expansion shall be 0.18 percent.

An **Inspector** from the **Bureau** may conduct a scheduled visit to inspect the laboratory facilities designated by the **Manufacturer** or **Supplier** to test the **Finely Divided Mineral**; the **Source** manufacturing process, the **Source** storage facilities; and the quality control policies, procedures, and practices used by the **Manufacturer** or **Supplier**. The **Manufacturer** or **Supplier** shall be responsible for payment of transportation, per diem (meals), lodging, and incidental travel costs incurred by the **Bureau Inspector** if the trip from the **Bureau** to the **Manufacturer** or **Supplier**, the **Manufacturer** or **Supplier** inspection, and the return trip to the **Bureau** cannot be completed within one day's normal work hours of 8:00 AM to 4:30 PM. Reimbursement for travel costs shall be provided no later than 30 calendar days after receipt of costs submitted by the **Department**.

The **Bureau** will notify the **Manufacturer** or **Supplier**, in writing, if the request for **Approved Source** status is granted or denied. A request may be denied if the **Manufacturer** or **Supplier** fails to meet the requirements of this policy memorandum, or for other reasons determined by the **Department**.

6.2 **Quality Control Requirements for Approved Sources:**

1. The **Manufacturer** or **Supplier** shall establish and maintain quality control policies and procedures for sampling and testing that are approved by the **Bureau**. The **Bureau** shall be notified of any changes in the **Manufacturer's** or **Supplier's** quality control program.

2. Testing laboratories used by the **Manufacturers** or **Suppliers** of **Fly Ash**, **GGBF Slag**, and **Dry Expansive Component** shall participate in the **CCRL** pozzolan program of the **NIST**, which includes inspection of facilities and testing of proficiency samples. As an alternative to the **CCRL** pozzolan program of the **NIST**, testing laboratories used by the **Manufacturers** or **Suppliers** of **GGBF Slag** and **Dry Expansive Component** may participate in the **CCRL** cement program. As another alternative**,** testing laboratories used by the **Manufacturers** or **Suppliers** of **Dry Expansive Component** shall have implemented a quality management system based on the **ISO 9000 or 14000 Series** standards in lieu of participating in a **CCRL** program. Testing laboratories used by the **Manufacturers** or **Suppliers** of **Microsilica** or **HRM**

shall participate in the **CCRL** pozzolan program of the **NIST** or shall have implemented a quality management system based on the **ISO 9000 or 14000 Series** standards.

Testing laboratories participating in an alternative quality system program that is not listed in the previous paragraph shall submit details of the program for approval by the **Bureau**.

6.3 **Reporting Requirements for Approved Sources:**

1. The **Manufacturer** or **Supplier** shall deliver a test report to the **Bureau** which lists the results of all **Grab** and/or **Composite Samples** taken and tested for the specified reporting period.

2. For **Fly Ash**, the report shall be every other month, and shall be delivered no later than forty calendar days after the end of each 2-month period. If the **Fly Ash Source** is sampling more frequently than once per 2-month period according to **ASTM** C 311, then the report shall be delivered no later than forty calendar days after the end of the composite date. If the deadline falls on a Saturday, Sunday, or State Holiday, the deadline shall be the next work day.

3. For **GGBF Slag**, **HRM**, **Microsilica**, and **Dry Expansive Component**, the report shall be every 4-months (triannually) and shall be delivered no later than forty calendar days after the end of each 4-month period. For the purpose of the reports, the 4-month periods shall end April 30, August 30, and December 31. If the deadline falls on a Saturday, Sunday, or State Holiday, the deadline shall be the next work day.

4. For **Blended Finely Divided Minerals**, the report shall be according to the above based on the product's predominant constituent or designated classification.

6.4 **Record Requirements for Approved Sources:**

1. Records of production control tests shall be maintained by the **Manufacturer** or **Supplier** for a minimum period of 5 years and shall be made available to the **Bureau** upon request.

2. Copies of bills of lading of quantities of **Finely Divided Minerals** shipped shall be maintained by the **Manufacturer** or **Supplier** for a minimum period of 3 years and shall be made available to the **Bureau** upon request. At a minimum, bills of lading shall contain the following information:

    a. The type of **Finely Divided Mineral**, including class, grade, etc.
    b. The quantity of shipment.
    c. The date of shipment.
    d. The **Manufacturer's** or **Supplier's** name.
    e. The **Source** location.
    f. The shipment's point of origin, if different from the **Source** location.
    g. The shipment's destination.
    h. The consignee's name.
    i. The bill of lading number.

6.5 Sampling and Test Requirements for Approved Sources:

1. For **Fly Ash**, each March, July, and November, the **Supplier** shall obtain a **Process Control (PRO) Grab Sample** according to **ASTM** C 311.

   For **GGBF Slag**, **HRM**, and **Microsilica**, each February, June, and October, the **Manufacturer** or **Supplier** shall obtain a **PRO Grab Sample** according to **ASTM** C 311.

   For **Blended Finely Divided Minerals**, sampling shall be according to the above based on the product's predominant constituent or designated classification. **PRO Samples** of each constituent **Finely Divided Mineral** shall also be obtained.

   For **Dry Expansive Component**, **PRO Grab Samples** are not required.

   The **PRO Grab Sample** shall be split for testing by the **Manufacturer** or **Supplier** and the **Bureau**. At this time, a sample of the current **Reference Material** used by the **Manufacturer** or **Supplier** for testing shall also be split.

   The **Bureau** may require that more frequent **PRO Grab Samples** be obtained and tested. These samples may be requested because of a change in the material, variations in test results between the **Bureau** and **Manufacturer** or **Supplier**, field test results, or other reasons as determined by the **Bureau**.

   The **Bureau** samples shall be placed in airtight containers, properly identified on form CBM CM01, and delivered to the **Bureau** no later than the last work day of the month. The **Manufacturer** or **Supplier** shall assume the cost to deliver the samples to the **Bureau**. Each **Finely Divided Mineral** sample and **Reference Material** sample shall not be less than 6 lb. (3 kg).

2. The **Manufacturer** or **Supplier** shall test the retained portion of each **PRO Sample**, using the retained portion of the **Reference Material**, for the standard physical and chemical properties listed in the applicable **Specification** in Section 3. For a **Blended Finely Divided Mineral**, the blended product shall be tested for both its standard physical and chemical properties, while each of its constituent **Finely Divided Minerals** shall be tested for their chemical properties. When all tests are completed, the **Manufacturer** or **Supplier** shall complete form CBM CM20 for **Fly Ash**, CBM CM21 for **GGBF Slag**, CBM CM22 for **Microsilica**, or CBM CM23 for **HRM**, as applicable, and deliver the test results to the **Bureau** no later than the last work day of the following month from the date of sample. For a **Blended Finely Divided Mineral**, use the form applicable to the product's predominant constituent or designated classification, and report each constituents' chemical results on its applicable form.

3. The test results obtained by the **Manufacturer** or **Supplier** and the **Bureau** on all split samples will be compared for compliance with the allowable differences for two laboratories set forth in the precision statement of each test method and for compliance with Section 3. If significant differences exist in the split sample test results, the **Department** will investigate sampling and test procedures, or require additional comparative sampling to determine the cause of the variation.

6.6 **Department Inspections of Approved Sources:**

1. An **Inspector** from the **Bureau** may conduct unscheduled visits to each **Approved Source** or one of its terminals. During this visit, the **Inspector** may take or witness the taking of a random **Independent Assurance (IND) Grab Sample** according to **ASTM** C 311. If a sample is taken, the **Inspector** will split the sample and deliver an equal portion to the **Manufacturer** or **Supplier**. The **Manufacturer** or **Supplier** shall test the retained portion of the split sample for the standard physical and chemical properties listed in the applicable **Specification** with the appropriate **Reference Material**. When all tests are completed, the **Manufacturer** or **Supplier** shall complete form CBM CM20 for **Fly Ash**, CBM CM21 for **GGBF Slag**, CBM CM22 for **Microsilica**, or CBM CM23 for **HRM**, as applicable, and deliver the test results to the **Bureau** no later than the last work day of the following month from the date of sample. The **Bureau** will evaluate the test results obtained on the sample by the **Manufacturer** or **Supplier** according to Subsection 6.5.

2. The **Manufacturer** or **Supplier** shall be responsible for payment of transportation, per diem (meals), lodging, and incidental travel costs incurred by the **Bureau Inspector** if the trip from the **Bureau** to the **Manufacturer** or **Supplier**, the **Manufacturer** inspection, and the return trip to the **Bureau** cannot be completed within one day's normal work hours of 8:00 AM to 4:30 PM. Reimbursement for travel costs shall be provided no later than 30 calendar days after receipt of costs submitted by the **Department**.

3. Random **Investigation (INV) Grab Samples** of the **Finely Divided Minerals** and the project **Cement** (**Reference Material**) will be obtained according to **ASTM** C 311 and **AASHTO** T 127, respectively, at final destination by a representative of the **Department**. The representative will either take or witness the taking of the **INV Samples**. The sampling location and frequency for obtaining **INV Samples** will be determined by the **Bureau** in consultation with the **District** offices.

   The **Bureau** will test **INV Samples** to ascertain the results of **Finely Divided Mineral**-project **Cement** (**Reference Material**) combinations. To verify that **Finely Divided Minerals** shipped from **Approved Sources** meet the requirements of Section 3, the **Bureau** may also test **INV Samples** with other appropriate **Reference Material**.

6.7 **Approved Source with Multiple Suppliers:**

In some cases an **Approved Source** will establish contract agreements with various **Suppliers** to sell their product. These **Suppliers** typically will use their own trade name for the product. A **Supplier** who desires to be listed on the **Bureau's** approved list shall have the **Approved Source** provide the **Bureau** a copy of the contract agreement. The **Supplier** and product trade name will be listed as long as the **Approved Source** remains in compliance with this policy memorandum. If the **Approved Source** is removed, the **Supplier** has the option to become approved by meeting the requirements for an **Approved Source**.

6.8 **Revocation of Approved Source Status:**

1. Failure of a **Manufacturer** or **Supplier** to meet the requirements of Sections 3 and 6 of this policy memorandum will be sufficient cause to revoke **Approved Source** status. The occurrence of three late submittals in a twelve month period for any of the following: test report (**Grab** or **Composite Samples**), **PRO Sample**, or **PRO** test results; will result in a meeting with the **Manufacturer** or **Supplier**. The **Manufacturer** or **Supplier** will be given an opportunity to submit a plan for corrective action. Failure to correct the late submittal problem will result in revocation of **Approved Source** status. A late submittal will be based on the postmark date. If there is no postmark date, a late submittal will be based on date of receipt by **Bureau.**

2. Failure to resolve significant differences in testing, as indicated by the test results obtained on **PRO** or **IND Samples** split with the **Manufacturer** or **Supplier** will be sufficient cause to revoke **Approved Source** status.

3. Failure of the testing laboratory, used by the **Manufacturer** or **Supplier** of a **Finely Divided Mineral**, to satisfactorily resolve the discrepancies noted in the **CCRL** inspection report, or maintain a quality management system (ISO or alternative quality system program) will be sufficient cause to revoke **Approved Source** status.

4. Revocation of **Approved Source** status will be reported to the **Manufacturer** or **Supplier** in writing.

5. The **Manufacturer** or **Supplier** may re-apply for **Approved Source** status any time after revocation. However, a minimum of 28 days shall have elapsed from the date of revocation before reinstatement will be considered. The actual date of reinstatement is subject to the determination of the **Engineer** that the problem or problems have been corrected.

7.0 UNAPPROVED SOURCE PROCEDURE

7.1 A **Manufacturer** or **Supplier** requesting approval of a **Finely Divided Mineral** from an **Unapproved Source** shall provide the following to the **Bureau**:

1. The **Manufacturer's** or **Supplier's** name and location.

2. The **Source** name, location (station), and number of generating units.

3. The name of the **Finely Divided Mineral** and its class or grade. However, the **Unapproved Source** procedure will not be permitted for **Blended Finely Divided Minerals** or **Dry Expansive Component**.

4. A copy of the latest **CCRL** inspection report and proficiency test results for the testing laboratory to be used by the **Manufacturer** or **Supplier**. The testing laboratory may participate in either the **CCRL** pozzolan or cement program. Otherwise, the **Manufacturer** or **Supplier** shall provide documentation for review that shows the testing laboratory has implemented a quality control and management system which is acceptable to the **Bureau**.

5. A current test report, in English, which indicates that the standard physical and chemical properties of the **Finely Divided Mineral** meets the applicable requirements of Section 3.

6. The transportation method and location at which an **Inspector** from the **Bureau** will be able to obtain **Acceptance (ACC) Samples**.

7. If requested by the **Bureau**, the **Manufacturer** or **Supplier** shall sample a 24-hr **Composite Preliminary (PRE) Sample** of the **Finely Divided Mineral** from current shipments according to **ASTM** C 311. The **Manufacturer** shall split the **PRE Sample**. The **Bureau** sample shall be placed in airtight containers, properly identified on form CBM CM01. A sample of the **Reference Material** used by the **Manufacturer** or **Supplier** for testing shall be included. The **Manufacturer** or **Supplier** shall assume the cost to deliver the **Sample** and **Reference Material** to the **Bureau**. The size of the **Bureau's** portion of the **PRE Sample**, and the **Reference Material** shall each not be less than 6 lb. (3 kg).

   The **Manufacturer** or **Supplier** shall test the retained portion of the **PRE Sample** for the standard physical and chemical properties listed in the applicable **Specification** in Section 3 with the appropriate **Reference Material**. When all tests are completed, the **Manufacturer** or **Supplier** shall complete form CBM CM20 for **Fly Ash**, CBM CM21 for **GGBF Slag**, CBM CM22 for **Microsilica**, or CBM CM23 for **HRM**, as applicable, and deliver the test results to the **Bureau**.

   The **Bureau** will test its portion of the **PRE Sample** for conformance to Section 3 with the appropriate **Reference Material**. The **Bureau** will compare the results obtained by both laboratories to determine compliance with the allowable difference between two laboratories set forth in the precision statement of each test method. Additional split sample testing will be required if the test results obtained on the **PRE Sample** do not comply with the **Specification** requirements and this policy memorandum.

7.2 **Sampling and Test Requirements for Unapproved Sources in North America:**

1. **Finely Divided Minerals** from an **Unapproved Source** will be sampled, tested, and approved by the **Bureau** before use on **Department** projects. The **Bureau** has the option to affix a seal to secure **Finely Divided Minerals** in storage (e.g. silo, truck, railroad car, or barge) until the **Bureau's** testing is completed.

2. Upon arrival of the **Finely Divided Mineral** to Illinois, an **Inspector** from the **Bureau** will obtain **Acceptance (ACC) Grab Samples** according to ASTM C 311. The **Bureau** will determine the number of representative samples required. The samples will be split by the **Inspector** with the **Manufacturer** or **Supplier** retaining one portion of each. At this time, samples of the current **Reference Material** used by the **Manufacturer** or **Supplier** for testing shall also be obtained.

3. The **Manufacturer** or **Supplier** may request the **Bureau** to sample the **Finely Divided Mineral** and **Reference Material** prior to arrival in Illinois. In the event the request is approved, the **Manufacturer** or **Supplier** shall be responsible for payment of transportation, per diem (meals), lodging, and incidental travel costs incurred by the **Department Inspector**. Reimbursement for travel costs shall be provided no later than 30 calendar days after receipt of costs submitted by the **Department**. If the

Department determines that it lacks the resources to accomplish out-of-state inspection, the **Finely Divided Mineral** may be sampled and tested according to the procedures in Subsection 7.3.

4. **Acceptance (ACC) Samples** will be tested with the appropriate **Reference Material** by the **Bureau** and **Manufacturer** or **Supplier** according to Subsection 7.1 Item 7 in order for conformance to Section 3 in order to approve the **Finely Divided Mineral** for use on **Department** projects.

5. **Random Investigation (INV) Samples** of **Finely Divided Minerals** may be obtained at final destination by a representative of the **Department**. The representative will either take or witness the taking of the **INV Samples**. **INV Samples** will be **Grab Samples** and will be taken according to **ASTM** C 311 for the **Finely Divided Mineral** and **AASHTO** T 127 for the **Cement** (**Reference Material**). The sampling location and frequency for obtaining **INV Samples** will be determined by the **Bureau** in consultation with the **District** offices. The **Bureau** will use **INV Samples** to verify that the **Finely Divided Mineral** shipped meets the requirements of Section 3.

7.3 **Sampling and Test Requirements for Unapproved Sources Located Outside North America:**

1. At the port of entry, an **Agent** of the importer shall obtain a **Preliminary (PRE) Composite Sample** according to **ASTM** C 311 from each of the vessel's holds containing foreign **Finely Divided Mineral**.

   The **Agent** shall split each vessel hold **Composite Sample** and mail one portion to the **Bureau**. The other portion from each vessel hold shall be mailed to the importer's testing laboratory. At this time, samples of the current **Reference Material** used by the importer's laboratory for testing shall also be mailed to the **Bureau**. The **Bureau** samples shall be placed in airtight containers, properly identified on form CBM CM01. The size of the **Bureau's** portion of each **Composite Sample** and the accompanying **Reference Material** shall each not be less than 6 lb. (3 kg).

2. An **Agent** of the importer shall obtain a minimum of one **Acceptance (ACC) Grab Sample** according to **ASTM** C 311 from each barge of foreign **Finely Divided Mineral** destined for Illinois. The **Agent** shall split each barge **Grab Sample** and mail one portion to the **Bureau**. The other portion shall be mailed to the importer's testing laboratory. At this time, samples of the current **Reference Material** used by the importer's laboratory for testing shall also be mailed to the **Bureau**. Sample containers, identification and size shall be the same as that detailed in item 1 above.

3. The importer of the **Finely Divided Mineral** shall be responsible for all sampling and mailing costs.

4. The importer's laboratory shall test its portion of each vessel and barge sample for the standard physical requirements of the applicable **Specifications**.

5. Upon completion of the tests, the importer shall deliver to the **Bureau** a certification and report that states the **Finely Divided Mineral** in the vessel unloaded at the port of entry and the **Finely Divided Mineral** loaded onto each barge destined for Illinois has been tested by the importer with the appropriate **Reference Material**, and

complies with the applicable **Specifications**. As part of the report, the importer shall complete form CBM CM20 for **Fly Ash**, CBM CM21 for **GGBF Slag**, CBM CM22 for **Microsilica**, or CBM CM23 for **HRM**, as applicable, for each vessel and barge sample tested. The report shall also include for all vessel samples: the name of the vessel, the source of the **Finely Divided Mineral**, each sample's hold number, the date the vessel arrived at the port of entry, and the date the sample was taken. In addition, the report shall include for all barge samples: the barge number, the date the sample was taken, and the quantity of **Finely Divided Mineral** in the barge.

6. The importer shall immediately notify the **Bureau** if a vessel or barge sample fails to meet the applicable **Specification** requirements.

7. The **Bureau** will review the certification and report and compare the importer's test data to the test data obtained by the **Bureau** on its portion of each split sample.

8. When the certification and report is examined and determined to be correct, the **Bureau** will notify the importer and the **District** offices that the **Finely Divided Mineral** is approved for state projects.

9. Random **Investigation (INV) Samples**, from one or more barges, may be taken by a **Department Inspector** when the barges arrive at the Illinois terminal(s). **INV Samples** will be **Grab Samples** and will be taken according to **ASTM** C 311**.** At this time, samples of the current **Reference Material** used by the importer's laboratory for testing shall also be mailed to the **Bureau**. The **Bureau** will use **INV Samples** to verify that the **Finely Divided Mineral** meets the requirements of the **Specifications**.

10. The **Department** will reject any foreign **Finely Divided Mineral** tested by the **Bureau**, or the importer, that does not meet the **Specification** requirements. For split samples where one party is within **Specification** and the other party is out of **Specification**, the **Finely Divided Mineral** will be considered out of **Specification** and will be rejected unless the failing test is determined to be flawed by the **Bureau**.

11. Alternative proposals to the sampling and test requirements stated in this subsection will be considered for **Finely Divided Minerals** which have an acceptable quality history, and which have previously been approved by the **Department**. Requests shall be directed to the **Bureau** for approval.

8.0 ACCEPTANCE OF FINELY DIVIDED MINERALS

8.1 **Finely Divided Minerals** will be accepted according to the **Specifications** and this policy memorandum.

8.2 The **Bureau** will maintain the Qualified Producer List Finely Divided Minerals on the internet, which will indicate the **Approved Sources** of **Finely Divided Minerals** that meet the requirements of the **Specifications** and this policy memorandum. This list will include the name, location, and **Producer/Supplier** Number of each approved **Manufacturer** or **Supplier** of **Finely Divided Minerals.** Other information as appropriate will also be provided on the list. These **Manufacturers** or **Suppliers** may ship **Finely Divided Minerals** for immediate use on **Department** projects.

8.3 **Finely Divided Minerals** from **Unapproved Sources** will be approved by the **Bureau** before use on **Department** projects.

9.0 REJECTION OF FINELY DIVIDED MINERALS

9.1 A **Finely Divided Mineral** that fails to conform to the requirements of Section 3 of this policy memorandum shall be rejected for use on **Department** projects.

9.2 The **Bureau** will notify the **Manufacturer** or **Supplier** when a **Finely Divided Mineral** is rejected for use on **Department** projects.

10.0 CLOSING NOTICE

Archived versions of this policy memorandum may be examined by contacting the **Bureau**.

The current **Bureau** Chief of Materials has approved this policy memorandum. Signed documents are on file with the **Bureau**.

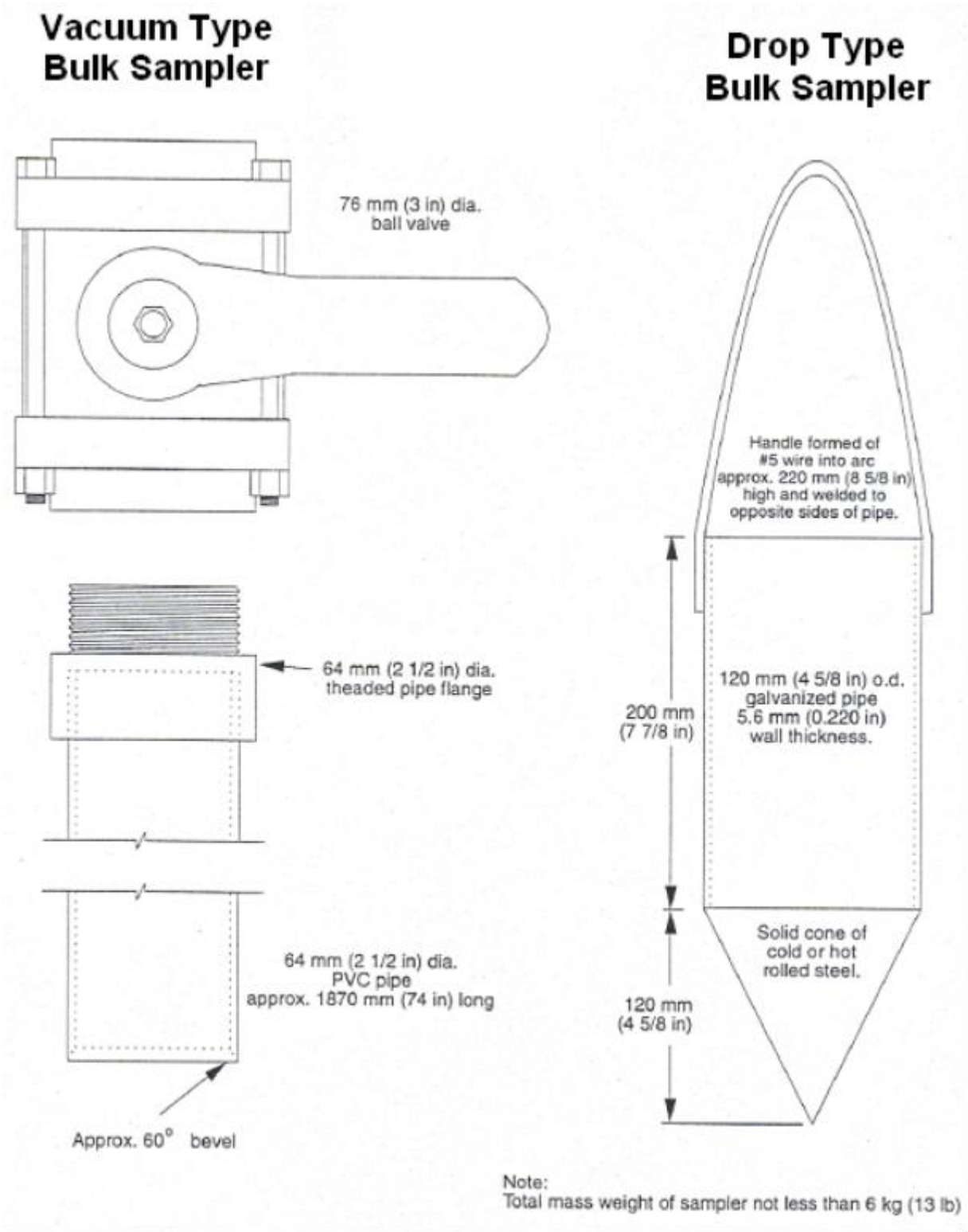
Vacuum Type
Bulk Sampler
76 mm (3 in) dia.
ball valve
64 mm (2 1/2 in) dia.
theaded pipe flange
64 mm (2 1/2 in) dia.
PVC pipe
approx. 1870 mm (74 in) long
Approx. 60° bevel
Drop Type
Bulk Sampler
Handle formed of
#5 wire into arc
approx. 220 mm (8 5/8 in)
high and welded to
opposite sides of pipe.
200 mm
(7 7/8 in)
120 mm (4 5/8 in) o.d.
galvanized pipe
5.6 mm (0.220 in)
wall thickness.
Solid cone of
cold or hot
rolled steel.
120 mm
(4 5/8 in)
Note:
Total mass weight of sampler not less than 6 kg (13 lb)

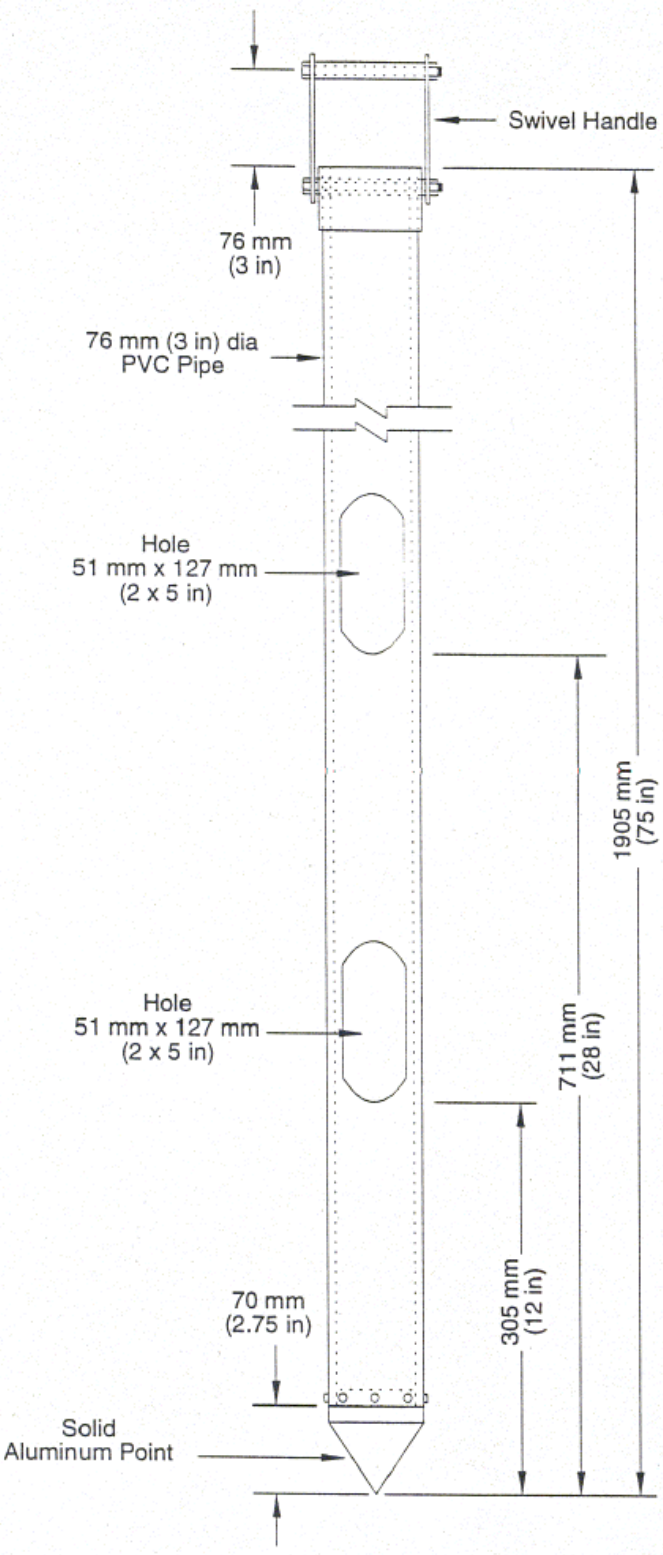

Tube Type Bulk Sampler