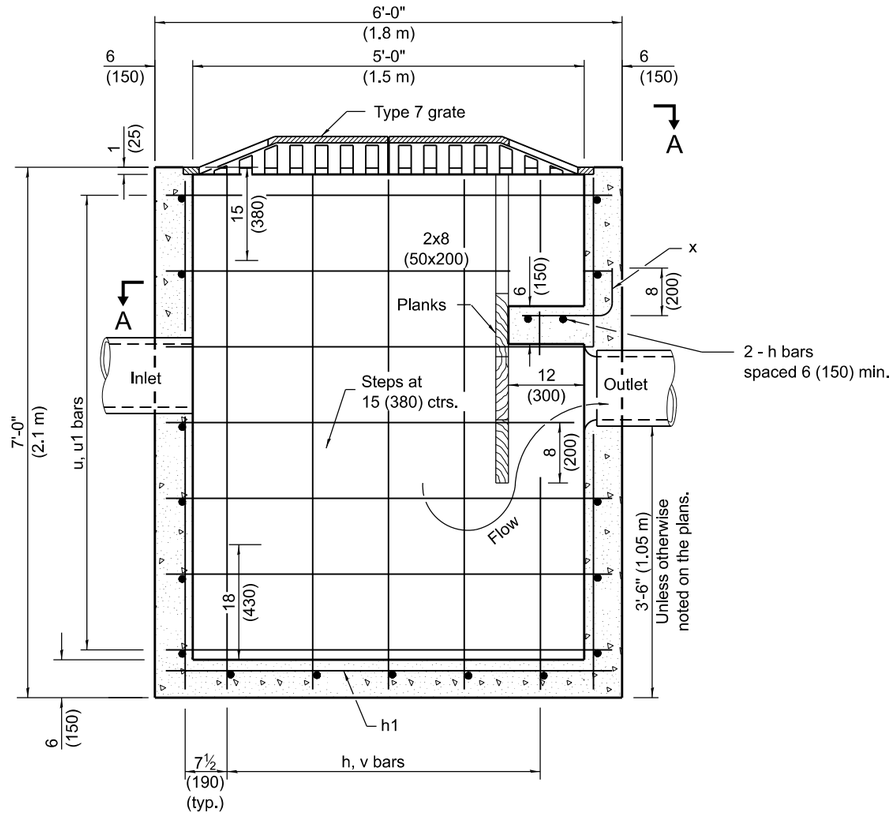

ELEVATION

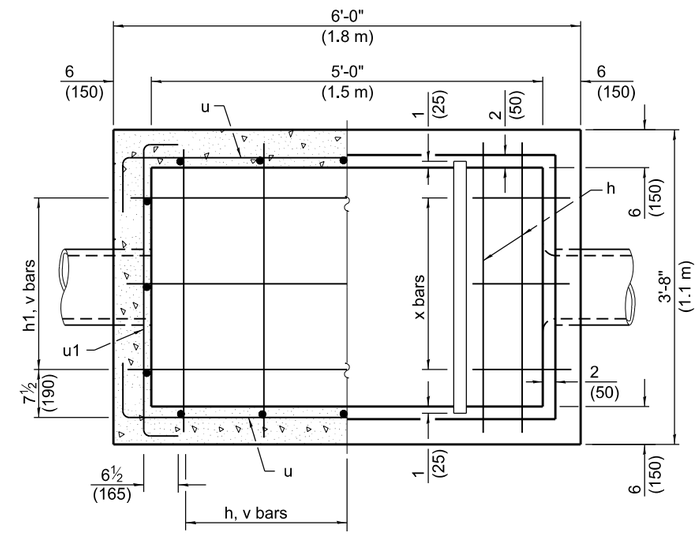

SECTION A-A

(Grating removed to show plan of baffles.)

MATERIALS REQUIRED FOR ONE (1) TYPE B CATCH BASIN

Bar	Qty.	Size	Shape	Length
h	7	No. 4 (No. 13)	———	3'-5" (1.02 m)
h1	3	No. 4 (No. 13)	———	5'-9" (1.72 m)
u	14	No. 4 (No. 13)	└———┘	7'-0" (2.10 m)
u1	14	No. 4 (No. 13)	└———┘	4'-6" (1.35 m)
v	16	No. 4 (No. 13)	———	6'-9" (2.02 m)
x	3	No. 4 (No. 13)	———┘	1'-11" (580)
Concrete			cu. yd. (m^3)	2.5 (1.90)
Reinforcement bars			lbs. (kg)	210 (95)

All bars shall be at 12 (300) centers unless otherwise shown. Reinforcement bar clearance shall be 1½ (40).

GENERAL NOTES

See Standard 602701 for details of steps.

All dimensions are in inches (millimeters) unless otherwise shown.

Illinois Department of Transportation

APPROVED January 1, 2013
Michael Brand
ENGINEER OF POLICY AND PROCEDURES

APPROVED January 1, 2013
ENGINEER OF DESIGN AND ENVIRONMENT

ISSUED 1-1-97

DATE	REVISIONS
1-1-13	Revised and relocated steps.
1-1-11	Added additional bar identification.

CATCH BASIN TYPE B

STANDARD 602006-04