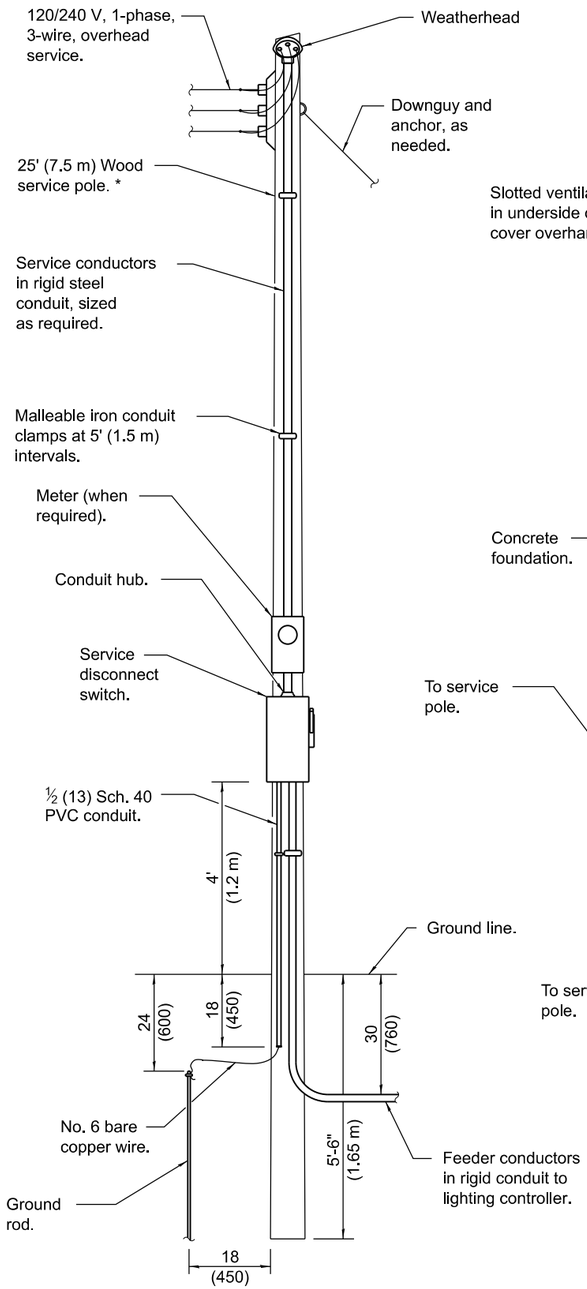

ELECTRIC SERVICE INSTALLATION

(Typical overhead service shown. Cut pole off for underground service and treat cut surface with preservative. Consult utility company standards for exact requirements.)
* Size larger as needed.

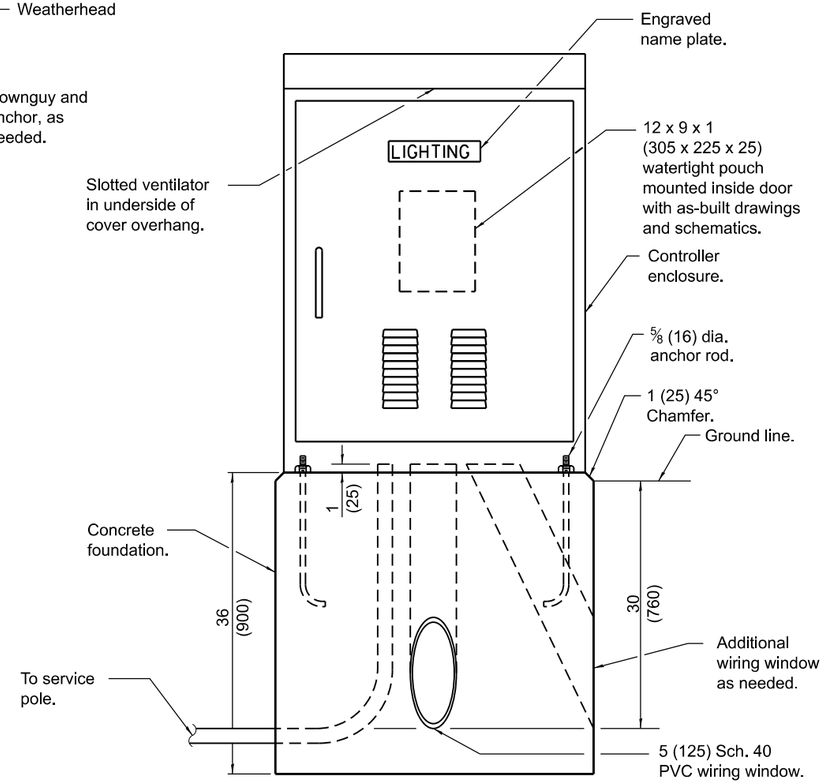

LIGHTING CONTROLLER

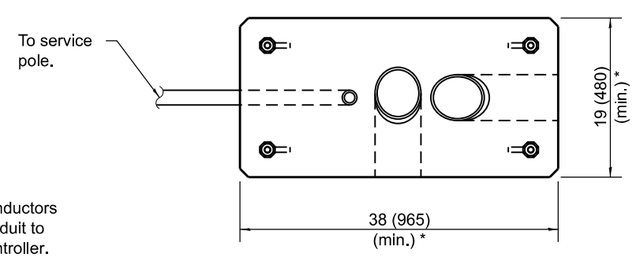

FOUNDATION (PLAN)

(Work pad not shown.)

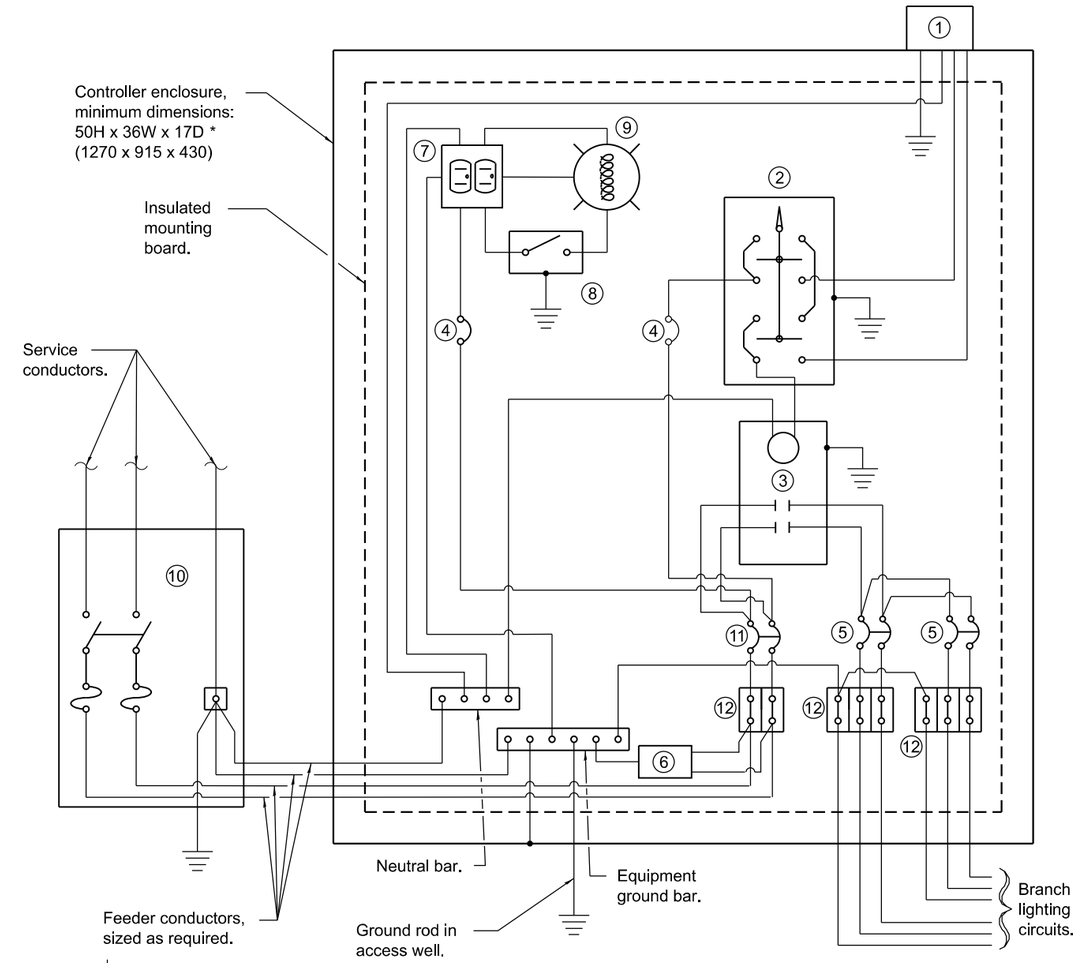

CONTROL SCHEMATIC

1. Photocell with integral surge arrester.
2. HAND-OFF-AUTO selector switch.
3. 100 amp*, electrically held contactor.
4. 15 amp, 1-pole circuit breaker.
5. 20 amp*, 2-pole circuit breaker (two spares required but not shown).
6. Surge arrester.
7. GFCI duplex receptacle.
8. Single-pole, single-throw switch.
9. Incandescent luminaire, enclosed and gasketted with 100 watt lamp.
10. Service disconnect switch - 2-pole, 3-wire, 100 amp*, fused at 100 amp*, solid neutral in NEMA 4X enclosure having lockable external handle.
11. 100 amp*, 2-pole circuit breaker.
12. Terminal block sized for conductors as shown on plans.

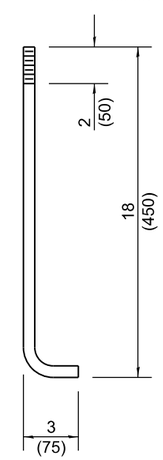

ANCHOR ROD DETAIL

* Size larger as needed.

All dimensions are in inches (millimeters) unless otherwise shown.

DATE	REVISIONS
1-1-19	Replaced ** note with new note
	regarding consulting utility company
	standards for installation.
1-1-15	Added note 12.

LIGHTING CONTROLLER BASE MOUNTED, 240V

STANDARD 825021-04

Illinois Department of Transportation

APPROVED January 1, 2019
ELECTRICAL AND MECHANICAL UNIT CHIEF

APPROVED January 1, 2019
ENGINEER OF DESIGN AND ENVIRONMENT

ISSUED 1-1-10