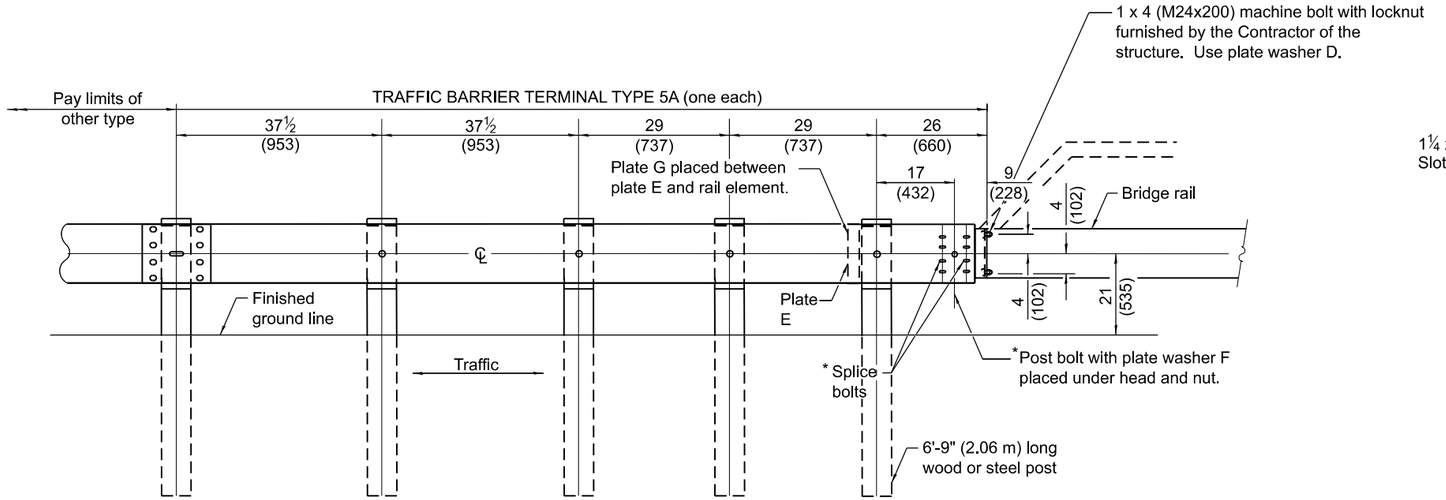

TYPE 5A - STEEL BRIDGE RAIL

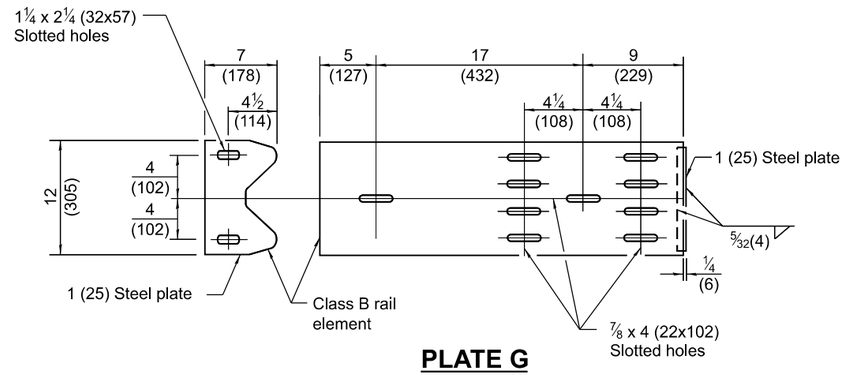

PLATE G

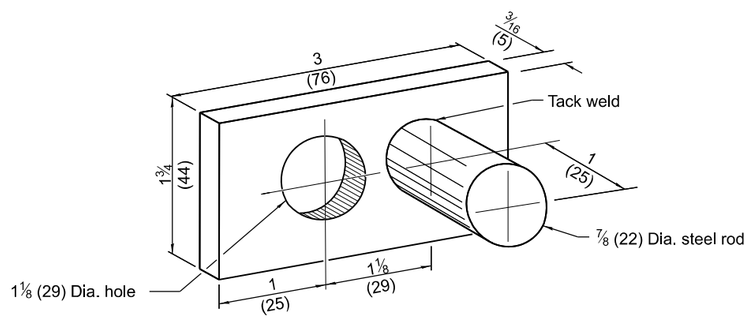

PLATE WASHER D

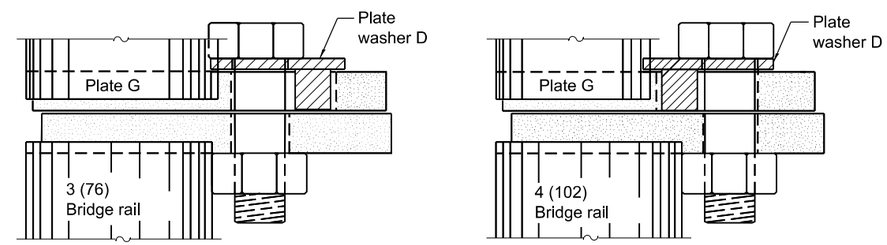

PLACEMENT OF PLATE WASHER D

(PLAN)

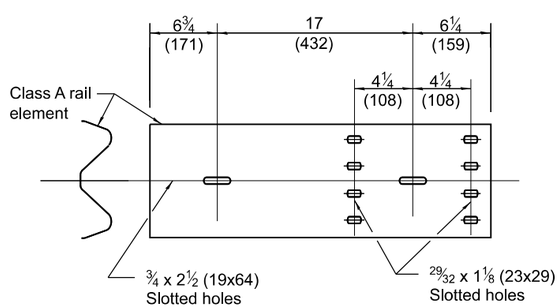

PLATE E

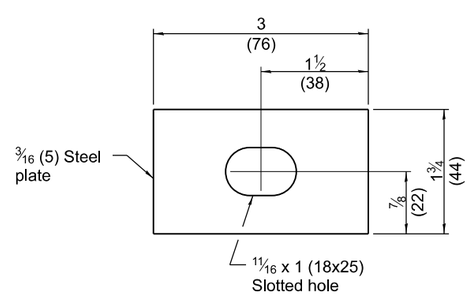

PLATE WASHER F

GENERAL NOTES

See Standard B.L.R. 26 for details of guardrail not shown.

Install plate washer D so the 1 (25) projection fills the remainder of the slotted holes in the 1 (25) end plate on plate G after the 1 (M24) dia. bolts are in place.

When an expansion joint exists below the connector, bolts shall be provided with a locknut or double nuts and shall be tightened only to a point that will allow plate G to be free to move.

The face of the guardrail shall be installed flush with the face of the bridge rail.

When this terminal is used with Standard 630001, the guardrail shall transition down to the height of the terminal.

All dimensions are in inches (millimeters) unless otherwise shown.

Illinois Department of Transportation

APPROVED January 1, 2009
ENGINEER OF LOCAL ROADS AND STREETS

APPROVED January 1, 2009
ENGINEER OF DESIGN AND ENVIRONMENT

ISSUED 1-1-08

DATE	REVISIONS
1-1-09	Switched units to English (metric).
1-1-08	New Standard. Was part of Std.
	631026 prior to January 1, 2007.

TRAFFIC BARRIER TERMINAL TYPE 5A

STANDARD B.L.R. 27-1