Environment, Health, and Safety
BERKELEY LAB

ENVIRONMENTAL SERVICES

Stormwater Pollution Prevention Plan for Industrial Activities

WDID #2 01I002421

Revision 7

October 2026

Prepared by:
Environmental Services Group
Environment, Health, and Safety Division
Lawrence Berkeley National Laboratory

This work was supported by the Director, Office of Science, U.S. Department of Energy under Contract Number DE-AC02-05CH11231.

The controlled version of this document is located on the Environment, Health, and Safety Division's PowerDMS webpage.
Printed or electronically transmitted copies are not official. Users are responsible for working with the latest approved revision.

Legally Responsible Person

"I certify under penalty of law that this document and all attachments were prepared under my direction or supervision in accordance with a system designed to assure that qualified personnel properly gather and evaluate the information submitted. Based on my inquiry of the person or persons who manage the system or those persons directly responsible for gathering the information, to the best of my knowledge and belief, the information submitted is true, accurate, and complete. I am aware that there are significant penalties for submitting false information, including the possibility of fine and imprisonment for knowing violations."

Signed By: Paul Blodgett Date: 10 / 27 / 2026

Paul Blodgett
Legally Responsible Person
Interim Director, Environment, Health, and Safety Division

The controlled version of this document is located on the Environment, Health, and Safety Division's PowerDMS webpage.
Printed or electronically transmitted copies are not official. Users are responsible for working with the latest approved revision.

Review and Approval

Prepared by:

Brendan J. Mulholland

_____ **Date:** 10 / 26 / 2026

Brendan Mulholland, PG, QSD, QISP
Stormwater Program Leader
Environmental Services Group
Environment, Health, and Safety Division

Reviewed by:

Jim Buehler

_____ **Date:** 10 / 26 / 2026

Jim Buehler
Environmental Services Group Leader
Environment, Health, and Safety Division

Approved by:

David Kestell

_____ **Date:** 10 / 27 / 2026

David Kestell
Environment, Waste & Radiation Protection Department Head
Environment, Health, and Safety Division

Subject Matter Expert (SME)
Brendan Mulholland

Stormwater Pollution Prevention Team
Salman Baig
Kirby Fernando
John Jelinski
Joseph Saadeh

The controlled version of this document is located on the Environment, Health, and Safety Division's PowerDMS webpage.
Printed or electronically transmitted copies are not official. Users are responsible for working with the latest approved revision.

Amendment Log

Amendment Number	Description	Date of Amendment
0	Original Issue	June 2015
1	All sections-of document formatted. Section 2.5.1: Added General Maintenance Work as an authorized non-stormwater discharge. Section 4.1.5: Added Protective Services' training for response to leaking personally owned vehicles. Section 4.2.2: Added dedicated passive filtration inserts at monitoring points.	December 2016
2	Updated Legally Responsible Person and ESG personnel. Updated Section 1 with Industrial General Permit SWPPP requirements, Exceedance Response Actions, summary of discharger status, and applicability of SIC Codes. Added Tables 1-1, 1-2, 1-3, and 1-4. Reformatted Section 2, revised Section 2.6 to include tracer dye as an authorized non-stormwater discharge. Added Figures 2-2 and 2-4, revised Figures 2-3 and 2-5. Revised Section 3 to include the Pollution Source Assessment. Added Figure 3-1, Revised Figures 3-2 and 3-3. Updated Section 4.2 Advanced BMPS. Updated Section 4.3 Industrial Activity-Specific Advanced BMPs. Added Figures 4-1, 4-2, 4-4, 4-5, 4-6, 4-7, 4-8, Updated Figure 4-3. Reformatted and updated Appendices, revised SMIP.	December 2019
3	Updated Legally Responsible Person, Duly Authorized Representative and ESG personnel. Added table summarizing the Lab's NAL exceedances from Reporting Year 2016 -2017 through to Reporting Year 2021-2022, and the corresponding ERA document and completion date. Updated the Lab's discharger status since Reporting Year 2015-2016. Removed outdoor storage of materials at the B77 yard. Added SSM /THUP project to list of construction projects. Updated the Pollutant Source Assessment by eliminating the former industrial use area at the B77 / 79 yard. Updated the industrial use activity area description by removing the former activities conducted at the B77 / 79 yard. Updated the summary of analytical parameters for monitoring points located at industrial use areas. Updated industrial activity-specific advanced BMPs description. Updated references and all appendices (including Appendix M SMIP).	November 2022
4	Updated the NAL exceedance (and reduction) summary table. Updated Berkeley Lab's Discharger Status summary table. Updated Pollutant Source Assessment for Monitoring Points MP-2, MP-4, and MP-5.	September 2023

The controlled version of this document is located on the Environment, Health, and Safety Division's PowerDMS webpage.
Printed or electronically transmitted copies are not official. Users are responsible for working with the latest approved revision.

Amendment Number	Description	Date of Amendment
5	Revised document title. Updated Forward section and Table 1-1. Revised all figures. Updated Sections 1.10 Exceedance Response Actions (ERAs), 1.10.1 Summary of Berkeley Lab's Discharger Status Since 2015, 1.14 SIC Code, 2.5.1 Authorized Non-Stormwater Discharges, 2.5.2 Unauthorized Non-Stormwater Discharges, 3.2.2 Parking / Driving, 3.4 Significant Spills and Leaks, 3.5 Pollutant Source Assessment, 3.5.1 Industrial Activity Areas, 3.5.2 No Exposure Determinations at Industrial Use Areas, 4 Best Management Practices, 4.1.8 Erosion Control (Soil Stabilization), 4.1.10.5 Non-Stormwater Control, 4.1.10.8 Post-Construction Controls, 4.2 Advanced BMPs, 4.2.1 Secondary Containment Structures, and 6 General Requirements. Updated Appendices: A, B, C, D, E, K, and M.	October 2024
6	Section 1.10.1, updated discharger status table. Section 2.3, updated average annual precipitation data. Updated Sections 2.5.1, 2.5.3, 3.1.3, and 3.2.1. Revised Figure 3-3. Revised construction project list in Section 3.3. Revised Sections 3.5, 3.5.1, 3.5.2, 4.1.10, 4.3, and 7.2.	November 2025
7	Legally Responsible Person Page - Updated the LRP. Abbreviations and Acronyms - Added CCRF, CMS, and RFID. Section 1.1 - Updated NOI recertification date. Section 1.5.3 - Updated Legally Responsible Person. Section 1.10.1 - Updated table. Section 2.3 - Updated average annual precipitation. Section 2.5.1 - Updated Figure 2-2. Section 2.6.1 - Added vehicle washing to this section. Section 2.6.2 - Deleted vehicle washing from this section. Section 3.2.1 - Added vehicle washing to this section. Section 3.4 - Updated spills and leaks. Section 3.5 - Updated pollutant source assessment. Section 3.5.2 - Updated no exposure determinations. Section 4.1.5 - Updated ESG 263 title. Section 4.1.10.5 - Added NS-2 dewatering operations. Sections 5.2 and 7.2 - Removed references to the *Site Environmental Report*, which is no longer required following the cancellation of DOE Order 231.1B Admin Chg 1 Environment, Safety and Health Reporting from Contract 31 in August 2026.	October 2026

The controlled version of this document is located on the Environment, Health, and Safety Division's PowerDMS webpage.
Printed or electronically transmitted copies are not official. Users are responsible for working with the latest approved revision.

Table of Contents

Legally Responsible Person ii
Review and Approval iii
Amendment Log iv
Foreword ix
Abbreviations and Acronyms x
1 Introduction and Background 1
1.1 Regulatory Background 1
1.2 SWPPP Requirements 2
1.3 Permit Registration Documents 3
1.4 SWPPP Availability and Implementation 3
1.5 Stormwater Management Program Responsibilities 3
1.6 Duly Authorized Representative 5
1.7 Permits and Governing Documents 5
1.8 SWPPP Amendments 5
1.9 Retention of Records 6
1.10 Exceedance Response Actions (ERAs) 7
1.11 Annual Comprehensive Facility Compliance Evaluation 7
1.12 Annual Report 8
1.13 Termination and Changes to General Permit Coverage 8
1.14 SIC Code 8
2 Site Information 9
2.1 Location 9
2.2 Geology 9
2.3 Climate and Rainfall 11
2.4 Facility Layout 11
2.5 Description of Drainage Areas and Existing Drainage 11
2.6 Discharge Sources 15
3 Potential Sources of Pollution 20
3.1 Materials Management 20
3.2 General Vehicle Use 28
3.3 Construction and Maintenance Activities 29
3.4 Significant Spills and Leaks 30
3.5 Pollutant Source Assessment 30
3.6 Summary of Analytical Parameters for Monitoring Points Located at Industrial Use Areas 37

The controlled version of this document is located on the Environment, Health, and Safety Division's PowerDMS webpage.
Printed or electronically transmitted copies are not official. Users are responsible for working with the latest approved revision.

4 Best Management Practices 38
4.1 Minimum BMPs 38
4.2 Advanced BMPs 53
4.3 Industrial Activity-Specific Advanced BMPs 56
5 Six Minimum Measures 58
5.1 Public Education and Outreach 58
5.2 Public Participation/Involvement 58
5.3 Illicit Discharge Detection and Elimination 59
5.4 Construction Site Runoff Control 59
5.5 Post-Construction Runoff Control 60
5.6 Pollution Prevention / Good Housekeeping 60
6 General Requirements 62
7 References 63
7.1 General Operational Guidance 63
7.2 Specific Operational Guidance and Data 63

List of Figures

Figure 2-1. Site Location Map
Figure 2-2. LBNL Facility Layout Including Creeks and Watershed Boundaries
Figure 2-3. Hydrauger System at LBNL
Figure 2-4. Developed Areas and Open Space at Berkeley Lab
Figure 3-1. Industrial Use Areas at Berkeley Lab
Figure 3-2. Waste Accumulation and Drum Storage Areas at Berkeley Lab
Figure 3-3. Locations of Aboveground and Underground Storage Tanks at Berkeley Lab
Figure 3-4. Stormwater Monitoring Point MP-2 At Building 76 Fuel Dispensing Area
Figure 3-5. Stormwater Monitoring Point MP-4 and MP-5 at the Hazardous Waste Handling Facility
Figure 4-1. Building 76 Fueling Area Oil-Water Separator Schematic
Figure 4-2. Compost filter sock and drain inlet filter fabric at stormwater monitoring point MP-2

List of Tables

Table 1-1. Stormwater Pollution Prevention Team
Table 1-2. Duly Authorized Representatives
Table 3-1. Summary of Analytical Parameters for Monitoring Points Located at Industrial Use Areas
Table 4-1. Records Locations

The controlled version of this document is located on the Environment, Health, and Safety Division's PowerDMS webpage.
Printed or electronically transmitted copies are not official. Users are responsible for working with the latest approved revision.

List of Appendices

Appendix A	Permit Registration Documents
Appendix B	Employee Training Logs
Appendix C	QISP Information and Certification
Appendix D	Duly Authorized Representatives
Appendix E	SWPPP Amendment Certifications
Appendix F	FA Procedure MA.UT.PRC.344 - Storm Drains – Using Sodium Sulfite/Sodium Thiosulfate to Dechlorinate Domestic Water Discharges
Appendix G	FA Procedure MA.UT.PRC.002 – Turbidity Monitoring of Hydrant ITM Liquid Run-Off
Appendix H	FA Procedure MA.UT.PRC.345 – Building Washing – Wastewater Management
Appendix I	FA Procedure MA.MG.PRC.328 – Bldg. 76 Motor Pool – Fuel Spill Containment Basin
Appendix J	EHS Procedure 870 – Discharge of Stormwater Through Storm Drains at the Building 85 Yards
Appendix K	Selected CASQA BMP Fact Sheets
Appendix L	FA Procedure MA.MG.PRC.056 – Rainwater Disposal
Appendix M	Stormwater Monitoring Implementation Plan

The controlled version of this document is located on the Environment, Health, and Safety Division's PowerDMS webpage.
Printed or electronically transmitted copies are not official. Users are responsible for working with the latest approved revision.

Foreword

This Lawrence Berkeley National Laboratory (LBNL) Stormwater Pollution Prevention Plan (SWPPP) for Industrial Activities is prepared by the Environmental Services Group (ESG) within LBNL's Environment, Health, and Safety (EHS) Division. The responsibilities for monitoring and analysis of potential hazards and pollutants rest primarily with ESG. LBNL's Facilities Division is responsible for design and records pertaining to physical components of the system, and for effective use and upkeep of the storm drain system.

The structure of this document consists of introductory and background material followed by the major topics specified in the State Water Resources Control Board (SWRCB or the Water Board) Water Quality Order No. 2014-0057-DWQ, as amended by Orders 2015-0122-DWQ and 2018-0028-DWQ. These orders address the National Pollutant Discharge Elimination System (NPDES) General Permit for Stormwater Discharges Associated with Industrial Activities (General Permit).

The intent is to provide both descriptions of LBNL's policies that affect stormwater runoff quality, many of which had been in effect before regulations for stormwater quality were in effect, and the specific procedures that are necessary to carry out California regulatory requirements for this Plan.

The SWPPP incorporates knowledge gained from site stormwater monitoring data and from modifications to site operations and facilities as they affect stormwater quality. The document format follows the current General Permit requirements and incorporates stormwater best management practice (BMP) guidelines put forth by the California Stormwater Quality Association (CASQA) and required by the General Permit.

The controlled version of this document is located on the Environment, Health, and Safety Division's PowerDMS webpage.
Printed or electronically transmitted copies are not official. Users are responsible for working with the latest approved revision.

Abbreviations and Acronyms

BAT	best available technology
BCT	best control technology
BMP	best management practice
BSO	Berkeley Site Office
Cal OES	California Office of Emergency Services
CASQA	California Stormwater Quality Association
CCRF	Central Chemical Receiving Facility
CFR	Code of Federal Regulations
CMS	Chemical Management System
COLD	beneficial use designation for cold water habitat
CWA	Clean Water Act
DAR	duly authorized representative
DOE	Department of Energy
DSA	Drum Storage Area
DTSC	Department of Toxic Substances Control
EBMUD	East Bay Municipal Utility District
ECM	erosion control mat
EHS	Environment, Health, and Safety Division
ERA	exceedance response action
ESG	Environmental Services Group
FTU	fixed treatment unit
GAC	granular activated carbon
General Permit	Industrial General Permit
HMBP	Hazardous Materials Business Plan
HWHF	Hazardous Waste Handling Facility
LBNL	Lawrence Berkeley National Laboratory (also Berkeley Lab)
LCW	low conductivity cooling water
LRP	Legally Responsible Person

The controlled version of this document is located on the Environment, Health, and Safety Division's PowerDMS webpage.
Printed or electronically transmitted copies are not official. Users are responsible for working with the latest approved revision.

MIGR	beneficial use designation for migratory waters
NAL	Numeric Action Limit
NOT	notice of termination
MP	monitoring point
NEC	No Exposure Certification
NOI	Notice of Intent
NPDES	National Pollutant Discharge Elimination System
O&G	oil and grease
ORPS	Occurrence Recording and Processing System
PCB	Polychlorinated Biphenyl
PCC	Portland Cement Concrete
PMT	Plant Maintenance Technician
PRD	Permit Registration Document
PSA	Pollutant Source Assessment
QISP	Qualified Industrial Stormwater Practitioner
RCRA	Resource Conservation and Recovery Act
RFID	Radio Frequency Identification
RWQCB	Regional Water Quality Control Board
RY	Reporting Year
SAA	satellite accumulation area
SDS	Safety Data Sheets
SIC	Standard Industrial Classification
SMARTS	Stormwater Multi Application and Report Tracking System
SMIP	Stormwater Monitoring Implementation Plan
SPWN	beneficial use designation for spawning waters
SPCC	Spill Prevention, Control, and Countermeasure Plan
SSM/THUP	Seismic Safety and Modernization/Transportation Hub Upgrade Project
SWRCB	California State Water Resources Control Board (also the Water Board)
SWPPP	Stormwater Pollution Prevention Plan (also Plan)
TMDL	Total Maximum Daily Load

The controlled version of this document is located on the Environment, Health, and Safety Division's PowerDMS webpage.
Printed or electronically transmitted copies are not official. Users are responsible for working with the latest approved revision.

TSS	total suspended solids
UC	University of California
USEPA	U.S. Environmental Protection Agency
WAA	waste accumulation area
WDID	Waste Discharge Identification
WMG	Waste Management Group
WPC	Work Planning and Control

The controlled version of this document is located on the Environment, Health, and Safety Division's PowerDMS webpage.
Printed or electronically transmitted copies are not official. Users are responsible for working with the latest approved revision.

1 Introduction and Background

Lawrence Berkeley National Laboratory (LBNL, Berkeley Lab) is a noncommercial research organization managed by the University of California (UC) on behalf of the U.S. Department of Energy (DOE). Berkeley Lab is a multi-program national laboratory that conducts unclassified research across a wide range of scientific disciplines, with key efforts in fundamental studies of the universe, quantitative biology, nanoscience, new energy systems, and environmental solutions, and the use of integrated computing as a tool for discovery. Berkeley Lab also supports nationwide university-based research by providing national facilities, including the National Center for Electron Microscopy, the Advanced Light Source, the Energy Sciences Network, and the National Energy Research Scientific Computing Center.

Support functions for these operations at Berkeley Lab include handling and storage of hazardous materials; management of hazardous wastes (pre-treatment of waste waters, storage, and/or treatment of hazardous waste in containers and tanks, and packaging and storage of low-level radioactive waste); metal finishing, which is conducted indoors; various fabrication and construction activities; and maintenance and operation of infrastructure and utilities. Normal operating hours are 8 am to 5 pm, Monday through Friday, although some research and support functions occur outside of normal operating hours.

1.1 REGULATORY BACKGROUND

The federal Clean Water Act (CWA) was amended in 1972 to provide that point discharges of pollutants to waters of the United States are effectively prohibited, unless the discharge is in compliance with a National Pollutant Discharge Elimination System (NPDES) permit. The 1987 amendments to the CWA added Section 402(p), which established a framework for regulating municipal and industrial stormwater discharges under the NPDES program. On November 16, 1990, the U.S. Environmental Protection Agency (USEPA) published final regulations that established application requirements and authorized states to issue general or individual permits to regulate industrial stormwater discharges.

The regulations require specific categories of industrial facilities to obtain an NPDES permit for stormwater discharges associated with industrial activities. Such facilities that discharge industrial stormwater either directly to surface waters or indirectly through the municipal storm drain system must be covered by a permit.

The California State Water Resources Control Board (SWRCB) adopted the General Permit for Stormwater Discharges Associated with Industrial Activities in November 1991. The SWRCB adopted General Permit Order 2014-0057-DWQ on April 1, 2014, which took effect July 1, 2015. With respect to Berkeley Lab, the permit requirements are administered and enforced by the San Francisco Bay Regional Water Quality Control Board (RWQCB). Berkeley Lab filed a Notice of Intent (NOI) to comply with the General Permit requirements in March 1992. The Stormwater NPDES permit identification number assigned to Berkeley Lab by the SWRCB letter of October 24, 1992, is **2 01I002421**. Berkeley Lab recertified its General Permit NOI on July 8, 2026.

The controlled version of this document is located on the Environment, Health, and Safety Division's PowerDMS webpage.
Printed or electronically transmitted copies are not official. Users are responsible for working with the latest approved revision.

1.2 SWPPP REQUIREMENTS

Berkeley Lab's SWPPP for Industrial Activities is designed to comply with the General Permit and has been prepared following the SWPPP template provided on CASQA's Stormwater *Best Management Practice Online Handbook: Industrial and Commercial* (CASQA 2019). In accordance with the General Permit, Section X.A, this SWPPP contains the following required elements:

- Facility Name and Contact Information
- Site Map
- List of Significant Industrial Materials
- Description of Potential Pollution Sources
- Assessment of Potential Pollutant Sources
- Minimum BMPs (nonstructural)
- Applicable Advanced BMPs (structural)
- Stormwater Monitoring Implementation Plan (SMIP)
- Annual Comprehensive Facility Compliance Evaluation (Annual Evaluation)
- Date that the SWPPP was initially prepared and the date of each SWPPP amendment

1.2.1 Purpose of the SWPPP

As part of the General Permit requirements, Berkeley Lab must develop and implement a stormwater pollution prevention plan (SWPPP, or "Plan"). The purpose of the SWPPP is to identify sources of pollution that could affect the quality of stormwater discharges, and to describe and ensure the implementation of practices to reduce pollutants in the stormwater discharges.

The General Permit also requires development and implementation of an SMIP, included in Appendix M of this SWPPP. The SMIP has the following objectives:

- Demonstrate compliance with the permit through the testing and analysis of stormwater runoff
- Aid in the implementation of the SWPPP
- Measure the effectiveness of the best management practices (BMPs) in removing pollutants in industrial stormwater discharges

The SWPPP, including the SMIP, will be amended whenever there is a significant change in facilities, operations, or maintenance that may cause the discharge of significant quantities of pollutants to surface water, groundwater, or the storm drain system, or upon review when it is found that the Plan has not achieved its objectives. Additionally, the SWPPP will be amended if there is justification for reduction of stormwater sampling and analysis based on consistent General Permit compliance where effluent water quality sampling results do not exceed Numeric Action Levels (NALs). The Plan will be annually reviewed and revised as appropriate by the Stormwater Program Leader.

The controlled version of this document is located on the Environment, Health, and Safety Division's PowerDMS webpage.
Printed or electronically transmitted copies are not official. Users are responsible for working with the latest approved revision.

1.3 PERMIT REGISTRATION DOCUMENTS

Required Permit Registration Documents (PRDs) were submitted to the Water Board via the Stormwater Multi Application and Report Tracking System (SMARTS) by the Legally Responsible Person (LRP), or duly authorized representative (DAR) under the direction of the LRP. The PRDs include the following components:

- Notice of Intent (NOI)
- LRP's Signed Certification Statement
- Site Map
- SWPPP
- Annual Fee

Site maps are included in the sections of this Plan. A copy of the submitted PRDs are also included in Appendix A of the SWPPP along with the Waste Discharge Identification (WDID) confirmation. Berkeley Lab will submit and certify via SMARTS any significant changes to the facilities layout, operations, or personnel.

1.4 SWPPP AVAILABILITY AND IMPLEMENTATION

The SWPPP is available on site to all employees during all hours of operation (8 am to 5 pm), and will be made available upon request by a State or Municipal inspector.

1.5 STORMWATER MANAGEMENT PROGRAM RESPONSIBILITIES

1.5.1 Department of Energy Oversight

As a DOE contractor, Berkeley Lab is subject to DOE environmental oversight. Local DOE oversight is performed by the Berkeley Site Office (BSO), with supplemental oversight by the DOE office at Oak Ridge National Laboratory in Tennessee, as needed.

1.5.2 LBNL Operations Group

Berkeley Lab is managed by the Regents of the UC under a contract with DOE. The LBNL Director delegates responsibility for various functions. The LBNL Associate Laboratory Director for Operations oversees the following organizational units:

- Environment, Health, and Safety (EHS) Division, which provides comprehensive environmental, health, and safety support services to the entire LBNL community
- Facilities Division, which oversees the planning, design, and construction of physical plant structures and subsequent minor construction, operation, and maintenance of these facilities

1.5.3 Stormwater Pollution Prevention Team

Berkeley Lab's EHS Division Interim Director, Paul Blodgett, is the LRP and delegates responsibility for stormwater management functions as provided in Table 1-1. This table will be updated as needed when there are changes to staff or staff responsibilities. All team members will be trained to perform the duties assigned to them. A copy of the employee training log is provided in Appendix B.

The controlled version of this document is located on the Environment, Health, and Safety Division's PowerDMS webpage.
Printed or electronically transmitted copies are not official. Users are responsible for working with the latest approved revision.

Berkeley Lab's Qualified Industrial Stormwater Practitioner's (QISP) information and certification is provided in Appendix C. The QISP will have primary responsibility for providing training to the appropriate team members assigned to perform the activities required in this SWPPP.

Table 1-1. Stormwater Pollution Prevention Team

Name	Title	Contact Information	Responsibilities
Jim Buehler	ESG Leader	(510) 486-7327 (direct) (916) 804-2388 (mobile) email: jbuehler@lbl.gov	Ensures permit compliance, delegates authority to Stormwater Program Leader. Duly Authorized Representative
Brendan Mulholland	Stormwater Program Leader	(510) 486-5852 (direct) (510) 381-5584 (mobile) email: bjmulholland@lbl.gov	SWPPP Implementation, SMARTS account administration and data entry, stormwater inspections and reporting (see description below).
John Jelinski	Quality Coordinator	(510) 486-7616 (direct) (510) 517-5378 (mobile) email: jajelinski@lbl.gov	Quality assurance.
Joseph Saadeh	Sample Collection Team Supervisor, Sample Collection Team (Alternate)	(510) 495-2408 (direct) (707) 480-0179 (mobile) email: jsaadeh@lbl.gov	Supervision of Sample Collection Team members. Stormwater sample collection and submittal (alternate).
Kirby Fernando	Sample Collection Team	(510) 486-4278 (direct) (408) 712-6418 (mobile) email: kirbyfernando@lbl.gov	Stormwater sample collection and submittal.
Salman Baig	Sample Collection Team	(510) 495-2408 (direct) (510) 458-8931 (mobile) email: smbaig1@lbl.gov	Stormwater sample collection and submittal.

ESG's Stormwater Program Leader is responsible for implementing the following functions associated with the SWPPP:

- Regulatory agency liaison
- SWPPP updates and revisions
- Annual and monthly facility inspection and reporting
- Spill reporting
- Identification and mitigation of pollutant sources
- Selection and support of appropriate BMPs
- Training
- Stormwater monitoring planning and implementation
- Facility support coordination
- Fire protection services coordination (through security and emergency operations)

The Facilities Division is responsible for implementing the following functions associated with the SWPPP:

- Facilities planning and design
- Material receiving, storage, and transport

The controlled version of this document is located on the Environment, Health, and Safety Division's PowerDMS webpage.
Printed or electronically transmitted copies are not official. Users are responsible for working with the latest approved revision.

- Vehicle services
- Facility modification
- Preventive maintenance and repair
- Plant inspection (routine)
- Erosion control
- Contaminant control
- Grounds and vegetation management
- Housekeeping
- Spill response (non-hazardous)
- Implementation of appropriate BMPs

1.6 DULY AUTHORIZED REPRESENTATIVE

The DAR, who has authority to sign PRDs, is listed in Table 1-2.

Written authorization from the LRP for the DAR is provided in Appendix D.

Table 1-2. Duly Authorized Representatives

Name	Title	Contact information
Jim Buehler	ESG Leader	(510) 486-7327 (direct) (916) 804-2388 (mobile) email: jbuehler@lbl.gov

1.7 PERMITS AND GOVERNING DOCUMENTS

In addition to the General Permit, the following documents have been taken into account while preparing this SWPPP:

- Regional Water Board requirements
- Region 2 Basin Plan requirements
- Total Maximum Daily Load (TMDL) Requirements
- LBNL's SPCC Plan
- LBNL's Hazardous Material Business Plan (HMBP)
- Hazardous Waste Regulations and Permits
- Air Quality Regulations and Permits
- CWA Section 401 Water Quality Certifications and 404 Permits

1.8 SWPPP AMENDMENTS

The SWPPP, including the SMIP (Appendix M), will be amended whenever there is a significant change in facilities, operations, or maintenance that may cause the discharge of significant quantities of pollutants to surface water, groundwater, or the storm drain system, or upon review when it is found that the SWPPP has

The controlled version of this document is located on the Environment, Health, and Safety Division's PowerDMS webpage.
Printed or electronically transmitted copies are not official. Users are responsible for working with the latest approved revision.

not achieved its objectives. Additionally, the SWPPP will be amended if there is justification for reduction of stormwater sampling and analysis based on consistent General Permit compliance where effluent water quality sampling results do not exceed NALs. The Plan will be annually reviewed and revised as appropriate by the Stormwater Program Leader.

A list of amendments (Amendment Log) is included in the front of this SWPPP, and amendment certifications are included in Appendix E. The Amendment Log will include the date of initial preparation and the date of each amendment.

The SWPPP will be revised following these events/circumstances:

- General Permit violation
- Reduction or increase in the total industrial area exposed to stormwater
- Stormwater controls do not meet the objectives of reducing or eliminating pollutants in stormwater discharges
- Change in industrial operations that may affect the discharge of pollutants to surface waters, groundwater(s), or a municipal separate storm sewer system (MS4)
- Change to the parties responsible for implementing the SWPPP
- Otherwise deemed necessary by the QISP

The following items will be included in each amendment:

- Who requested the amendment
- The location of proposed change
- The reason for change
- The original BMP(s) proposed, if any
- The new BMP(s) proposed

Amendments will be logged at the front of the SWPPP and certification kept in Appendix E. The SWPPP text will be revised, replaced, and/or hand annotated as necessary to properly convey the amendment. SWPPP amendments must be certified and submitted by the LRP or their designated DAR via SMARTS within 30 days whenever the SWPPP contains significant revisions.

1.9 RETENTION OF RECORDS

Paper or electronic records of documents required by this SWPPP will be retained for a minimum of 5 years from the date generated or date submitted, whichever is later. Copies of these records will be available for review by the Water Board's staff at the facility during scheduled facility operating hours. Upon written request by USEPA, or the local MS4, Berkeley Lab will provide paper or electronic copies of requested records to the Water Boards, USEPA, or local MS4 within 10 working days from receipt of the request.

The controlled version of this document is located on the Environment, Health, and Safety Division's PowerDMS webpage.
Printed or electronically transmitted copies are not official. Users are responsible for working with the latest approved revision.

1.10 EXCEEDANCE RESPONSE ACTIONS (ERAS)

Beginning with permit coverage in Reporting Year (RY) 2015–2016, all dischargers regulated by California's NPDES General Permit for Storm Water Discharges Associated with Industrial Activity were designated "Baseline Status" for each of their parameters tested. If any of these averages exceeded the Annual NALs or if two or more results from individual samples exceed the Instantaneous Maximum NALs as established by the Water Board, then the facility was placed in "Level 1 Status" for that parameter. Level 1 status begins on July 1 of the following reporting year. As required by a Level 1 Status, the discharger is required to complete a Level 1 ERA Evaluation and Report under the oversight of a QISP and submit a Level 1 ERA Report that is written by a QISP. If in a subsequent year there are repeated exceedances for the same parameters identified in the Level 1 report, the facility is placed in a "Level 2 Status" and a Level 2 ERA Action Plan and Report are prepared in accordance with the General Permit.

The purpose of ERA evaluations and reports is to identify the sources of pollutants and to determine which BMPs can be implemented to reduce the concentration of the parameters that were exceeded. The discharger can return to Baseline Status for each parameter if sample results from at least four consecutive samples indicate no additional NAL exceedances.

1.10.1 Summary of Berkeley Lab's Discharger Status Since 2015

The following table summarizes LBNL's discharger status since adoption of the General Permit in 2015.

Reporting Year	General Permit Discharger Status
2015–2016	Baseline
2016–2017	Level 1
2017–2018	Level 2
2018–2019	Baseline
2019–2020	Level 2
2020–2021	Level 2
2021–2022	Level 2
2022–2023	Level 2
2023–2024	Baseline
2024–2025	Baseline
2025–2026	Level 1
2026-2027	Baseline

1.11 ANNUAL COMPREHENSIVE FACILITY COMPLIANCE EVALUATION

Section XV of the General Permit requires the Discharger to conduct one Annual Comprehensive Facility Compliance Evaluation (Annual Evaluation) for each reporting year (July 1 to June 30). Annual Evaluations will be conducted at least 8 months and not more than 16 months after the previous Annual Evaluation. The planned window for conducting the Annual Evaluation is between April and June of each year. The SWPPP will be revised, as appropriate, based on the results of the Annual Evaluation, and the revisions will be implemented within 90 days of the Annual Evaluation.

At a minimum, Annual Evaluations will consist of the following:

- A review of all sampling, visual observation, and inspection and monitoring records and sampling and analysis results conducted during the previous reporting year

The controlled version of this document is located on the Environment, Health, and Safety Division's PowerDMS webpage.
Printed or electronically transmitted copies are not official. Users are responsible for working with the latest approved revision.

- A visual inspection of all areas of industrial activity and associated potential pollutant sources for evidence of, or the potential for, pollutants entering the stormwater conveyance system
- A visual inspection of all drainage areas previously identified as having no exposure to industrial activities and materials in accordance with the definitions in Section XVII
- A visual inspection of equipment needed to implement the BMPs
- A visual inspection of any BMPs
- A review and effectiveness assessment of all BMPs for each area of industrial activity and associated potential pollutant sources to determine whether the BMPs are properly designed, implemented, and effective in reducing and preventing pollutants in industrial stormwater discharges and authorized non-stormwater discharges (NSWDs)
- An assessment of any other factors needed to comply with the Annual Reporting requirements in General Permit Section XVI.B

1.12 ANNUAL REPORT

The Annual Report will be prepared by LBNL's Stormwater Program Leader, certified, and electronically submitted no later than July 15 following each reporting year using the standardized format and checklists in SMARTS based on the reporting requirements identified in Section XVI of the General Permit. Annual reports will be submitted in SMARTS and in accordance with information required by the online forms.

1.13 TERMINATION AND CHANGES TO GENERAL PERMIT COVERAGE

When any of the following conditions occur, termination of coverage under the General Permit will be requested by LBNL's Stormwater Program Leader by submitting a Notice of Termination (NOT) via SMARTS:

- Operation of the facility has been transferred to another entity
- The facility has ceased operations, completed closure activities, and removed all industrial-related pollutant-generating sources
- The facility's operations have changed and are no longer subject to the General Permit

The SWPPP and all provisions of the General Permit will be complied with until a valid NOT is received and accepted by the SWRCB. If ownership changes, the new owner of the facility will be notified of the General Permit and regulatory requirements for permit coverage.

1.14 SIC CODE

Berkeley Lab is regulated by the Water Board with active industrial permit WDID # 2 01I002421 and primary SIC code 9999-Nonclassifiable Establishments. LBNL's SWPPP describes Berkeley Lab's primary activity using SIC code 8733 – Noncommercial Research Organization.

The controlled version of this document is located on the Environment, Health, and Safety Division's PowerDMS webpage.
Printed or electronically transmitted copies are not official. Users are responsible for working with the latest approved revision.

2 Site Information

This section presents an overview of the LBNL site, including its location, climate, layout, and water drainage and discharge systems.

2.1 LOCATION

Berkeley Lab is located within the cities of both Oakland and Berkeley, which are located in Alameda County. It borders the northeast side of the UC Berkeley campus in Berkeley between Centennial Drive and Gayley Road. Figure 2-1 provides the site location of Berkeley Lab. The facility encompasses approximately 200 acres of steep, generally southern- and western-facing hillside terrain at elevations of 450 to 1,000 feet above sea level. Approximately 110 acres, including steep slopes and vegetated areas, remain undeveloped.

2.2 GEOLOGY

Three principal bedrock units underlie most of the site, as follows:

- **Great Valley Group.** Marine mudstones, sandstones, and shales of this unit underlie the western and southern portions of the site. The permeability of these rocks is relatively low, so the rate of groundwater flow is also low.
- **Orinda Formation.** Non-marine sedimentary rocks of this unit overlie the Great Valley Group and constitute the exposed bedrock underlying most of the site's developed area. The Orinda Formation consists primarily of sandstones, mudstones, and conglomerates deposited in fluvial and alluvial environments. The permeability of this formation is generally much lower than that of the underlying Great Valley Group or overlying Moraga Formation, so groundwater flow rates in this unit are also very low.
- **Moraga Formation.** This unit consists of volcanic rocks that underlie most of the higher elevations, as well as much of the central developed area, which is commonly referred to as "Old Town." The Moraga Formation constitutes the main water-bearing unit at the site. Permeabilities and groundwater flows are significantly higher in this unit than in the Great Valley Group and the Orinda Formation.

In addition to the bedrock units described above, the Claremont Formation (primarily marine chert and shale) and the San Pablo Group (primarily marine sandstones) underlie small areas in the easternmost part of the site. In many areas of the site, the main bedrock units described above are overlain by unconsolidated surficial materials consisting primarily of soil, colluvium (sedimentary deposits that have accumulated by mass wasting processes on, or at the foot of, hill slopes), and artificial fill. Soil derived primarily from the bedrock units has accumulated to typical thicknesses of 3 feet or more across much of the site. Engineered cutting (i.e., excavation of rock and soil) and filling (i.e., placement of fill composed of compacted soils derived from nearby areas) of the hilly terrain has been necessary to provide suitable building sites for some building locations.

The controlled version of this document is located on the Environment, Health, and Safety Division's PowerDMS webpage.
Printed or electronically transmitted copies are not official. Users are responsible for working with the latest approved revision.



Figure 2-1. Site Location Map

The controlled version of this document is located on the Environment, Health, and Safety Division's PowerDMS webpage.
Printed or electronically transmitted copies are not official. Users are responsible for working with the latest approved revision.

2.3 CLIMATE AND RAINFALL

The average annual temperature at Berkeley Lab is in the mid-50s degrees Fahrenheit (°F). More than 90% of the time the temperature is in the range of 40° to 70°F. Seldom does the maximum temperature exceed 90°F or the minimum temperature drop below 32°F.

Winds are generally light and from the southeast during nighttime hours or in advance of approaching storms, and from the west-northwest during the daytime. The average wind speed for the year is less than 5 miles per hour. Wind speeds remain below 10 miles per hour more than 90% of the time. The highest winds are usually associated with storms.

The average annual precipitation at Berkeley Lab for water years 2020 through 2026 is 25.19 inches of rain (with no record of measurable snow). Hydrologists and climatologists use the term *water year* to represent rainfall occurring between October 1 of one year and September 30 of the next year because it characterizes California's seasonal rainfall cycle better than a calendar year. At Berkeley Lab, approximately 95% of the annual rainfall occurs between October and May. The wettest of these months are typically December through February.

2.4 FACILITY LAYOUT

Approximately 80 permanent buildings at the LBNL facility are used for administrative offices, research and development laboratories, site maintenance and operations activities, a cafeteria, a fire response station, construction trade shops (plumbing, electrical, and mechanical), hazardous waste storage, one vehicle fueling island, minor maintenance operations, site maintenance operations crew yard, and shipping and receiving, stores, and warehouse activities. Approximately 100 smaller buildings and modular units are used primarily as offices but also house monitoring stations, emergency generators, and chemical and waste storage facilities. Figure 2-2 shows the overall layout of major buildings and structures at Berkeley Lab, as well as the watershed detail described in the next section.

2.4.1 Facility Operating Hours

As described in Section 1, Berkeley Lab's normal operating hours are 8 am to 5 pm, Monday through Friday, although some research and support functions occur outside of normal operating hours.

2.5 DESCRIPTION OF DRAINAGE AREAS AND EXISTING DRAINAGE

2.5.1 Storm Drain System

The Strawberry Creek watershed includes other UC property, public streets of both the cities of Oakland and Berkeley, and private property. The total Strawberry Creek watershed above Gayley Road encompasses approximately 878 acres. Berkeley Lab is located within the Strawberry Creek watershed in an area characterized by three main canyons and related tributaries. Figure 2-2 shows the area drained by each of four sub-watersheds.

The controlled version of this document is located on the Environment, Health, and Safety Division's PowerDMS webpage.
Printed or electronically transmitted copies are not official. Users are responsible for working with the latest approved revision.

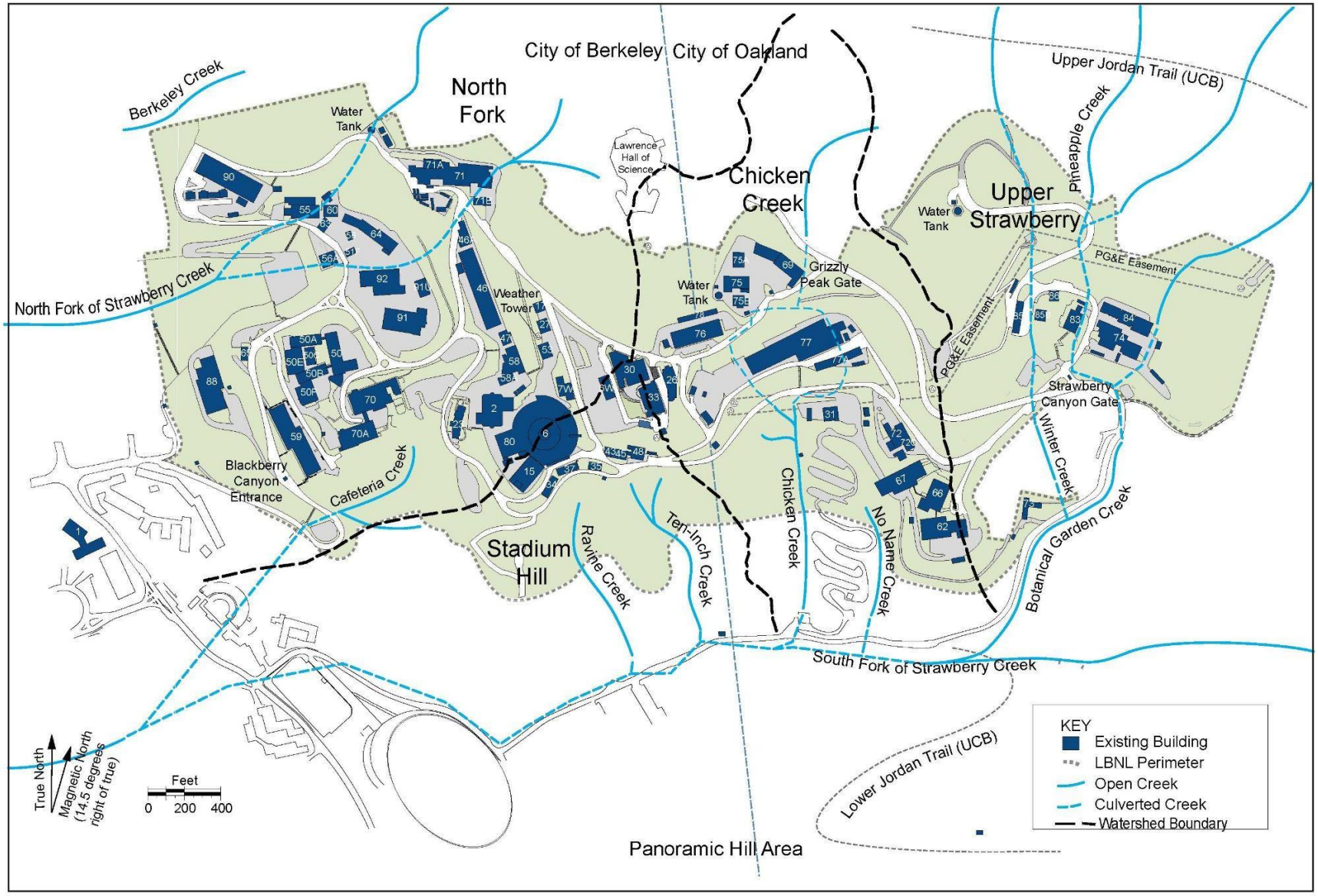

Figure 2-2. LBNL Facility Layout Including Creeks and Watershed Boundaries

The controlled version of this document is located on the Environment, Health, and Safety Division's PowerDMS webpage.
Printed or electronically transmitted copies are not official. Users are responsible for working with the latest approved revision.

The North Fork of Strawberry Creek watershed (Blackberry Canyon) is approximately 170 acres comprised of steep canyons and hillsides covered with brush, trees, and grass. Within this area are LBNL buildings, parking lots, paved areas and other improvements, and up-slope buildings, roads, and parking lots belonging to UC, in addition to public roads and private property. Drainage from the North Fork of Strawberry Creek watershed above Berkeley Lab (and including the areas within Berkeley Lab's boundary within that watershed) discharges to a 60-inch concrete culvert at the head of Le Conte Avenue in Berkeley.

On the south and east, and to a certain extent to the west, the LBNL site comprises portions of three other sub-watersheds: Stadium Hill, Chicken Creek, and Upper Strawberry. These sub-watersheds consist mainly of steep canyons and natural hillsides but also contain LBNL infrastructure and some of the UC's facilities, including the Botanical Garden. Southerly and easterly portions of LBNL discharge to Chicken Creek, Ten-Inch Creek, Ravine Creek, and Cafeteria Creek, as well as to other small tributaries, and then to the South Fork of Strawberry Creek.

On the south, while still in Strawberry Canyon, Strawberry Creek is diverted through 36- and 48-inch diameter concrete pipes and emerges as a surface stream near the eastern end of the UC Berkeley campus. The north and south forks of Strawberry Creek traverse the UC Berkeley campus and join at the western side of the campus near Oxford Street. These waters are then directed into the City of Berkeley's Oxford and Center Streets culvert. Runoff from the entire upper watershed, including the UC Berkeley campus, is delivered to the entrance of this culvert. The runoff flows through the City of Berkeley's storm drainage system and empties into San Francisco Bay.

A sitewide storm drain system, designed and installed beginning in the 1960s, discharges into the North Fork of Strawberry Creek watershed on the north side of Berkeley Lab and into Strawberry Creek on the south side. This system, as initially built, had the capacity to handle storms with runoff intensities expected in a 25-year maximum-intensity storm. Any current upgrades or additions to the system are designed and constructed to handle runoff from the 100-year storm.

Berkeley Lab is not located within a 100-year flood plain.

2.5.2 Hydrogeology

The hydrogeology of the LBNL site is controlled by its complex stratigraphy, faults, and fractures. Locally discontinuous and perched water-bearing zones are common and are indicated by springs, seasonal surface seeps, and variable water levels in wells. These conditions are caused by several factors, including low permeability claystone and siltstone interbeds, pervious sandstone lenses, and fractured volcanic rock. Shallow groundwater varies from approximately 0 to 90 feet below ground surface.

Subsurface drains (hydraugers) have been installed on steep hills to increase slope stability (Figure 2-3).

The controlled version of this document is located on the Environment, Health, and Safety Division's PowerDMS webpage.
Printed or electronically transmitted copies are not official. Users are responsible for working with the latest approved revision.

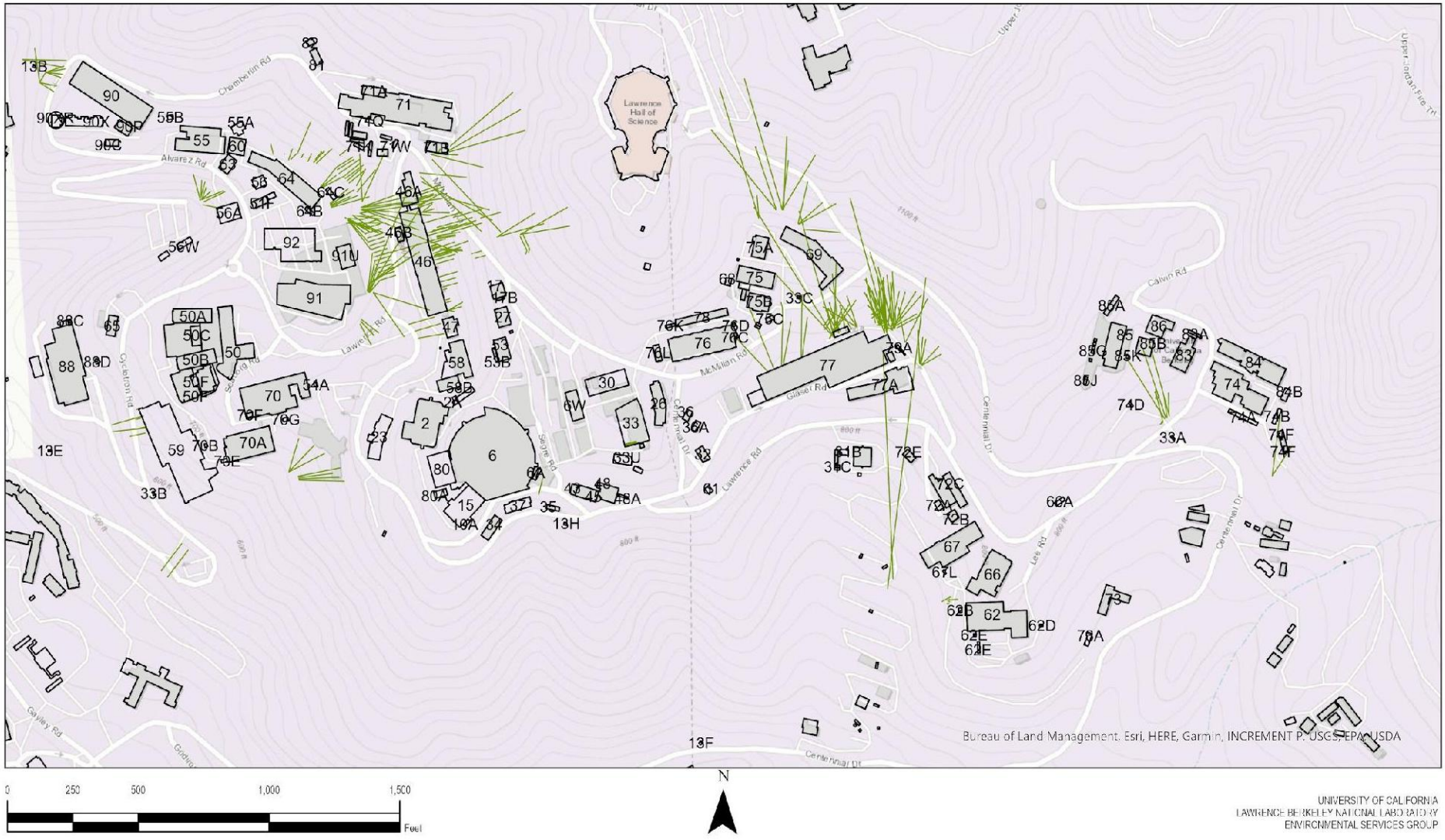

Figure 2-3. Hydrauger System at LBNL

The controlled version of this document is located on the Environment, Health, and Safety Division's PowerDMS webpage.
Printed or electronically transmitted copies are not official. Users are responsible for working with the latest approved revision.

Groundwater flow generally follows the surface topography southward toward the City of Berkeley, or toward the drainage streams (Strawberry Creek and its tributaries). The groundwater is not presently used as a source of drinking water for Berkeley Lab, the UC Berkeley campus, or the City of Berkeley. The City of Berkeley allows the use of groundwater by individuals only for irrigation.

In recent years, Berkeley Lab has installed numerous groundwater monitoring wells to evaluate the environmental quality of the groundwater on site. Many of these wells are located at specific areas of environmental concern. Monitoring wells are also installed at the downgradient edge of the site perimeter to monitor groundwater leaving the site. Most of these wells are routinely sampled to monitor changes (if any) in constituent levels.

2.5.3 Storm Runoff

About 95% of the average annual rainfall at the LBNL site occurs from October through May, and intensities are seldom greater than 0.5 inch per hour. Thunderstorms, hail, and snow in the San Francisco Bay Area are extremely rare occurrences. Peak flow in Strawberry Creek at the LBNL boundary has not been measured, but calculations for various discharge points can be found in the *Storm Drainage Study of Eastern Portion of the Strawberry Creek Watershed* (Kuntz, 2004), a study commissioned by the LBNL Facilities Division's Design and Construction Department.

The peak runoff rate downstream at the lower end of the UC Berkeley campus was calculated to be about 1,700 cubic feet per second.

Figure 2-4 shows the developed areas with buildings, roads, and paved surfaces within the LBNL perimeter that comprise the site's impervious areas. The developed areas represent approximately 35% of the entire acreage. The remaining 65% of open space is mostly steep hillsides covered with natural grasses and other vegetation to minimize erosion.

2.6 DISCHARGE SOURCES

2.6.1 Authorized Non-Stormwater Discharges

Atmospheric condensates. Small quantities of condensed water from air conditioning, refrigeration, and compressor systems may be released to the ground on the exterior of LBNL buildings. This condensate does not contact nor contain any chemicals. Condensate releases could enter the storm drain system.

The controlled version of this document is located on the Environment, Health, and Safety Division's PowerDMS webpage.
Printed or electronically transmitted copies are not official. Users are responsible for working with the latest approved revision.

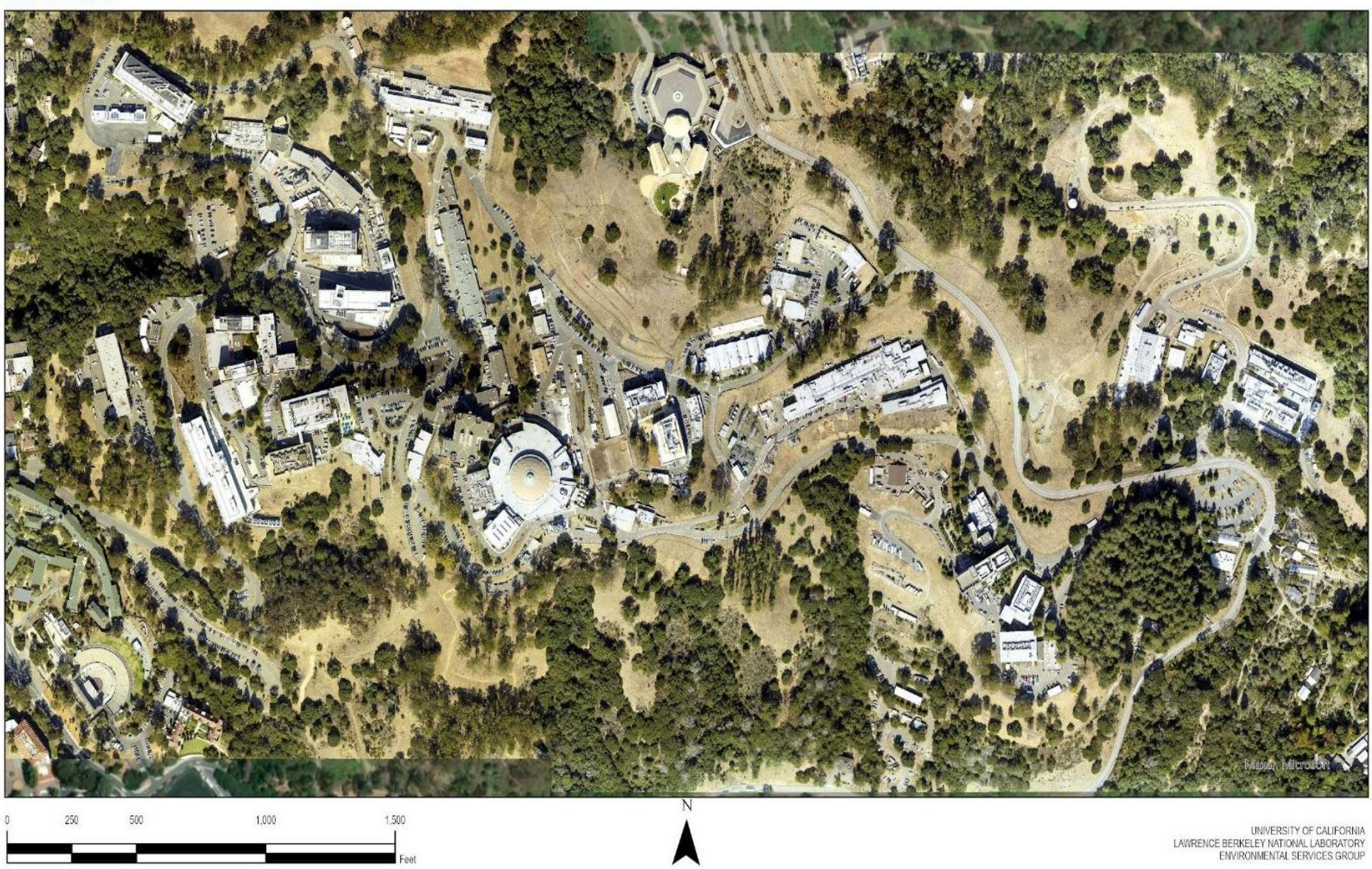

Figure 2-4. Developed Areas and Open Space at Berkeley Lab

The controlled version of this document is located on the Environment, Health, and Safety Division's PowerDMS webpage.
Printed or electronically transmitted copies are not official. Users are responsible for working with the latest approved revision.

Fire hydrant and sprinkler flushing, and fire drills. The National Fire Protection Code requires that fire hydrants and sprinkler systems be flushed. This flushing water, which comes from the domestic supply, is allowed to enter the storm drain system after treatment for chlorine and chloramine. Given the high flow rate and volume associated with fire hydrant flushing and flow rate testing activity, extra stormwater BMPs might need to be placed during this activity to prevent sediments from being mobilized in the creek beds downstream. Appendix F provides the Facilities Division's operating procedure (MA.UT.PRC.344) for the placement of dechlorination tablets to minimize any pollution due to chlorine and/or chloramine to the extent possible. Appendix G provides the Facilities Division's operating procedure (MA.UT.PRC.002), *Turbidity Monitoring of Hydrant ITM Liquid Runoff*. Flow from fire hydrant flushing varies from year to year. Fire equipment testing and drills account for a smaller amount of runoff, which may also enter the storm drain system after dechlorination treatment.

Berkeley Lab's Facilities Division maintains records relating to hydrant and sprinkler system flushing operations. In addition, ESG provides advance notification to UC Berkeley's EHS for hydrant flushing.

Fire suppression runoff. In an emergency, water from fire hydrants or tankers used to suppress fires could enter the storm drain system. However, if it is determined by the emergency incident command that hazardous materials are involved, containment of the runoff will be initiated.

General maintenance work. Small-scale facility maintenance and grounds work may require the limited use of the domestic water (e.g., rain gutter and downspout cleaning). If there is no evidence of contamination in the runoff and reasonable effort is made to first divert the runoff onto vegetated slopes, runoff generated from general maintenance activities may enter the storm drain after dechlorination treatment.

Groundwater reaching the surface. These releases are from local springs, creeks, and horizontal wells (hydraugers) installed to drain subsurface water to stabilize slopes. Hydrauger discharges are tested and the discharge, if found to be uncontaminated, is typically routed to the storm drainage system.

Landscape watering. During the summer months, some landscape watering may occur on site on a limited scale. Overwatering is minimized to the degree that very little water would flow to the storm drain.

Safety shower/eyewash testing and operation with appropriate controls. Some of Berkeley Lab's safety shower/eyewash stations are located at a building's exterior. These stations are tested periodically for functionality, and a very small quantity of domestic water may be released during testing. Larger quantities of water containing dilute chemicals may be released to the ground around the unit during emergency use. If use were required during a storm event, drainage from the unit could enter stormwater runoff.

Secondary containment pump-outs. Accumulated rainwater in secondary containments may be manually pumped out or released by opening a valve from the containment area. If the presence of oil or an oily sheen on the surface is evident, the water is collected into a drum or vessel for disposal. Upon request, EHS staff evaluates the accumulated stormwater and will provide advice on the proper disposal methods. If there is no evidence of pollution of the accumulated stormwater, reasonable effort is made to discharge the accumulated water onto soils. Otherwise, the water may flow into the storm drain system. Berkeley Lab's Facilities Division maintains records relating to secondary containment pump-outs.

Subsurface drains. Some of Berkeley Lab's building and retaining walls have basement or foundation drains. Those discharges are typically routed directly into the storm drainage system.

The controlled version of this document is located on the Environment, Health, and Safety Division's PowerDMS webpage.
Printed or electronically transmitted copies are not official. Users are responsible for working with the latest approved revision.

Tracer dye. Dye tracing may be used to analyze the flow of water within the storm drain conveyance system. Tracer dyes shall not contain any substances regulated as pollutants pursuant to the CWA (40 CFR 122.21 and 40 CFR 122.42), nor California Proposition 65 chemicals. The Stormwater Program Leader shall be notified prior to the planned use of tracer dye in the stormwater conveyance system.

Utility line/vault pump-outs. Accumulated water that is due to seepage into utility lines or vaults may be manually pumped out on occasion. Any water that has accumulated in these lines or vaults is checked for the presence of oil or an oily sheen on the water's surface. If oil is detected, the water is collected into a drum or vessel for disposal. Upon request, EHS staff will evaluate the accumulated water and will provide advice on the proper disposal methods. If there is no evidence of contamination in the accumulated water, reasonable effort is made to discharge pumped water onto soils. Otherwise, the discharged water may flow into the storm drain system. Berkeley Lab's Facilities Division maintains records relating to utility line and vault pump-outs.

Vehicle washing. Vehicle washing is conducted on a quarterly basis on the LBNL campus, or vehicles are washed at an off-site commercial vehicle washing facility. On-site washing of vehicles is managed by Fleet Services and is performed by an outside vendor. The vendor receives stormwater training from Berkeley Lab's Stormwater Program Manager and is required to implement prescribed stormwater controls prior to and during the vehicle washing operations.

Stormwater controls for on-site vehicle washing include, but are not limited to, protecting drain inlets and stormwater conveyance systems such that wash water is not allowed to enter the stormwater conveyance system, placing dechlorination tablets at both the water source and at stormwater drain inlets or conveyance systems, and containerizing wash water and rinsate for off-site disposal by the vendor. Water or rinsate generated from the washing operation is prohibited from entering Berkeley Lab's stormwater conveyance system.

Water line breaks where appropriate BMPs have been implemented. Occasional breaks occur in the LBNL domestic water supply lines, and this water may enter the storm drain system. Dechlorination tablets are used to minimize chloramine levels to the extent possible. See Appendix F, MA.UT.PRC.344, the Facilities Division's operating procedure for dechlorinating domestic water discharges, and ESG Procedure 260, *Spill Response Sample Collection*, for further details.

2.6.2 Unauthorized Non-Stormwater Discharges

Building wash water. The disposal of any building wash waters or other liquid substance into the storm drain system is prohibited. See Appendix H for the Facilities Division's operating procedure (MA.MG.PRC.345) for Building Washing – Wastewater Management. The disposal of building wash water into the storm drain system is prohibited.

Closed-loop process cooling water system. If a break in a piping system occurs, water from the closed-loop process cooling water system could be released into soils or the ground surface. This water contains low concentrations of corrosion inhibitors and biocides. The disposal of a closed-loop process cooling water stream into the storm drain system is prohibited.

Contaminated or untreated groundwater reaching the surface. At Buildings 46, 51, and 51B, hydrauger or sump discharge of contaminated groundwater is collected and treated by granular activated carbon (GAC)

The controlled version of this document is located on the Environment, Health, and Safety Division's PowerDMS webpage.
Printed or electronically transmitted copies are not official. Users are responsible for working with the latest approved revision.

systems before being released to the sanitary sewer under a permit from the East Bay Municipal Utility District (EBMUD) or being reinjected into the aquifer for soil flushing purposes under an agreement with the California Department of Toxic Substances Control (DTSC). The disposal of contaminated or untreated groundwater into the storm drain system is prohibited.

Cooling tower mist. The disposal of a cooling tower water stream into the storm drain system is prohibited. However, a very small volume of fine water mist originating from cooling towers may occur. Corrosion and scale inhibitors are added in small doses to the tower's domestic water supply to prevent algae, rust, and scale buildup. The additives are monitored during tower operation and maintenance activity. Potential pollutants originating from cooling tower mist are not anticipated.

Drilling or monitoring well development waters. These waters are collected into drums or vessels for appropriate disposal. Typically EHS staff evaluate the collected water and provide advice on proper disposal methods. The disposal of drilling or monitoring well development water into the storm drain system is prohibited.

Dust control waters. Dust control water is typically sprayed during demolition activities of concrete or during soil excavations. The disposal of dust control waters into the storm drain system is prohibited.

Low-conductivity cooling water (LCW) system. During emergency conditions such as breaks in underground transfer piping or leaks from aboveground storage tanks, water from an LCW system could be released into soils or the ground surface. This water does not contain chemicals, though it has lower concentrations of dissolved salts, which can have an adverse effect on aquatic species. The major uses of the cooling water (high-energy magnets and power supplies) are closed-loop systems. The disposal of LCW into the storm drain system is prohibited.

Potable water releases and water line breaks where appropriate BMPs have NOT been implemented. Occasional potable water releases and water line breaks occur in Berkeley Lab's domestic water supply lines and potable water sources. This water may not enter the storm drain system unless dechlorination tablets are used to minimize chloramine levels to the extent possible. The disposal of water derived from potable water sources and domestic water line breaks without appropriate BMPs at the storm drain system is prohibited. ESG documents these types of releases and, depending on the volume, may report the release to external regulatory agencies.

Sewer line breaks. A break or leak in the sanitary sewer system could accidentally flow to the storm drain system. However, such a breach of the sewer would represent an emergency condition, and Berkeley Lab would apply diversion or containment measures to prevent stormwater system pollution. The disposal of sanitary sewer water into the storm drain system is prohibited.

Small maintenance and repair work cleanup. Cleanup from small facilities and grounds maintenance and repair work may include rinsing of containers and hand tools. Laborers are typically engaged in repair and maintenance activities such as saw cutting, trenching, digging, and small building and ground surface repairs. Rinse water is typically limited to a few gallons and is discharged to the ground surface in the staging area outside Building 31. Sandbags are used to promote infiltration of rinse water into the surrounding soils. The disposal of rinse water derived from small maintenance and tool cleanup into the storm drain system is prohibited.

The controlled version of this document is located on the Environment, Health, and Safety Division's PowerDMS webpage.
Printed or electronically transmitted copies are not official. Users are responsible for working with the latest approved revision.

3 Potential Sources of Pollution

The major potential sources of pollution to stormwater runoff at Berkeley Lab are the result of on-site activities that have the potential for contaminants to come into contact with stormwater. Those on-site activities are categorized as follows:

- Facility operations and maintenance
- Materials management, including receipt, transportation, storage, and disposal
- General vehicle use, which includes personally owned vehicles, lab fleet, shuttle bus transportation, and construction vehicles
- Construction and maintenance
- Soil and groundwater contamination
- New spills and leaks

The use of contaminants in scientific experiments also presents the potential for spills from transient equipment or material. However, most of these experiments are conducted indoors or at facilities with suitable safeguards to prevent any pollution of the outdoor environment.

Berkeley Lab's SWPPP focuses on point sources of industrial activity that have the potential to contribute stormwater pollutants that could affect stormwater quality. Section 3.5 of the SWPPP describes the Pollutant Source Assessment (PSA) procedure and identifies stormwater monitoring points and their associated analytical parameters based on each industrial use area. Figure 3-1 provides locations for each of Berkeley Lab's industrial use areas.

The SWPPP also describes waste accumulation areas (WAAs), Drum Storage Areas (DSAs), hazardous waste treatment units, and aboveground and underground storage tanks, as well as outdoor equipment such as electrical transformers and cooling towers, which could add to stormwater contaminants in the event of a spill.

The SWPPP's SMIP provides locations and descriptions of stormwater monitoring points based on proximity to industrial use areas.

On-site activities with significant potential for pollutants to encounter stormwater runoff are described in detail below.

3.1 MATERIALS MANAGEMENT

Materials management activities at Berkeley Lab include material loading and unloading during delivery and shipment, movement of materials around the site (materials in transit), storage and use of materials in facility operations, waste management activities, and research activities using radionuclides.

The controlled version of this document is located on the Environment, Health, and Safety Division's PowerDMS webpage.
Printed or electronically transmitted copies are not official. Users are responsible for working with the latest approved revision.

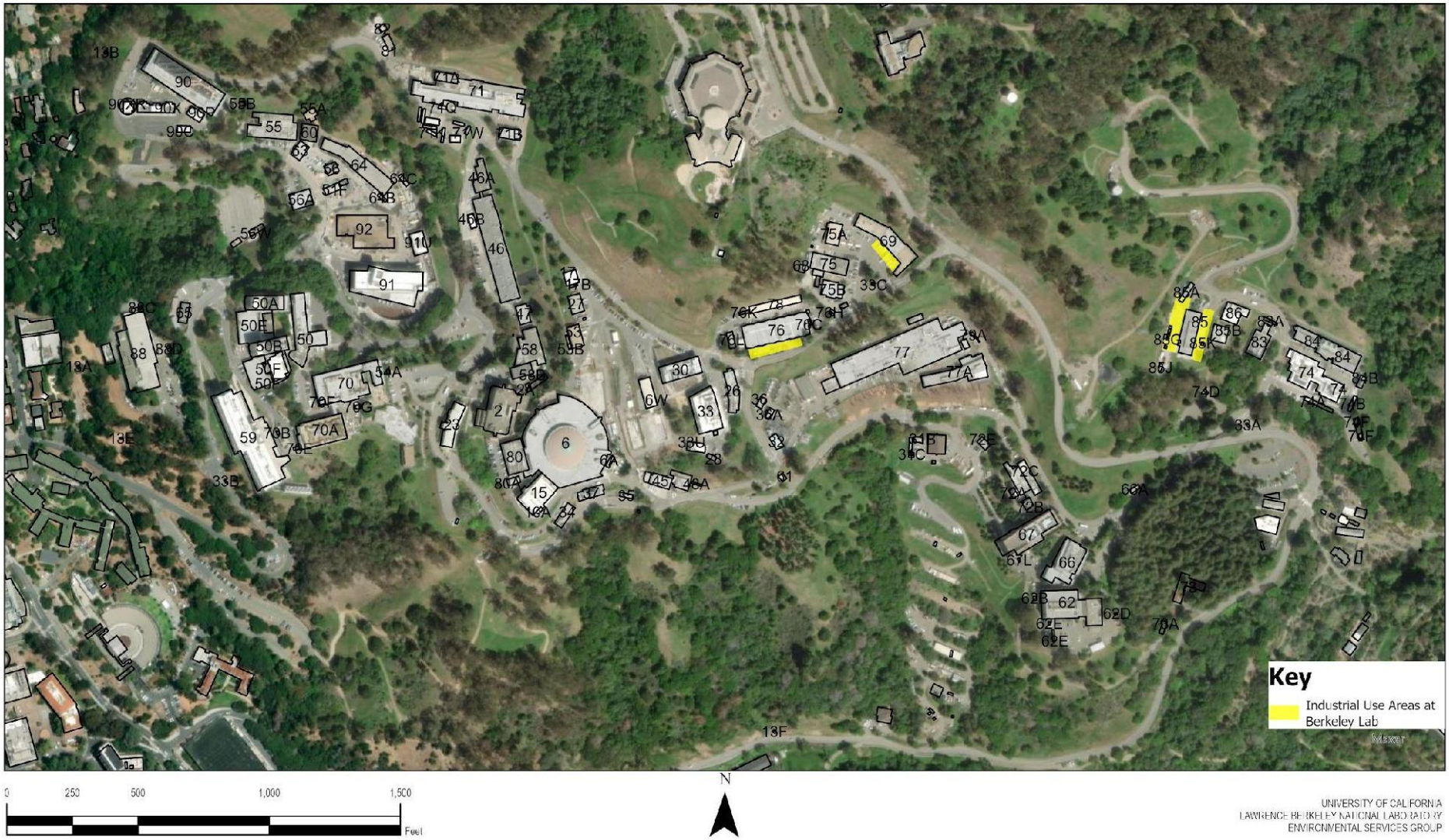

Figure 3-1. Industrial Use Areas at Berkeley Lab

The controlled version of this document is located on the Environment, Health, and Safety Division's PowerDMS webpage.
Printed or electronically transmitted copies are not official. Users are responsible for working with the latest approved revision.

Berkeley Lab's EHS Division maintains an inventory of all chemicals and storage locations at Berkeley Lab in accordance with federal regulations. In addition, the inventory is expanded to meet California Business Plan requirements and is voluntarily submitted to the State and City of Berkeley annually as the HMBP. In addition, an inventory of waste materials is maintained for its Hazardous Waste Handling Facility (HWHF) in Building 85.

General categories of hazardous materials present on the site are listed below.

- Ethylene glycol, diethyl ether, glycol ether
- Raw metals for use/recycling
- Acids, dilute and strong concentrations
- Caustics, dilute and strong concentrations
- Organic solvents
- Halogenated solvents
- Anodizing solution raw chemicals, caustics, specialized cleaners, and cleaning bath additives
- Radionuclides
- Waste, oily sludge from an oil–water separator
- Drinking water (considered a contaminant because EBMUD uses chloramine as a disinfectant)

This list does not include contents of petroleum containing aboveground and underground storage tanks (see Section 3.1.3.2).

3.1.1 Loading and Unloading

Potential for stormwater pollution from loading and unloading operations exists from accidental release of contaminants to storm drains or to the ground surface through breakage and leakage of containers of up to 55-gallon capacity. Berkeley Lab's Shipping and Receiving Area is located at Building 69 and includes most of the new material received at the site; it should be noted that the Receiving Area is completely covered by a roof, so this area is not monitored as described in Section 3.5.2.1. Drums of new liquid materials are transferred from Building 69 to the Bulk Storage Facility. Other transfers would include those to and from WAAs, which are located throughout the site (Figure 3-2). All WAAs are covered by a roof structure and all hazardous wastes are placed over secondary containments inside the WAA structure. In addition, weekly visual inspections are performed by the Waste Management Group's (WMG's) Waste Generator Advisors. If a spill is noted, it is immediately documented, responsible parties are notified, and the spill is cleaned up. The hazardous waste is ultimately transferred to the HWHF for consolidation, packaging, and storage, pending off-site disposal.

The controlled version of this document is located on the Environment, Health, and Safety Division's PowerDMS webpage.
Printed or electronically transmitted copies are not official. Users are responsible for working with the latest approved revision.

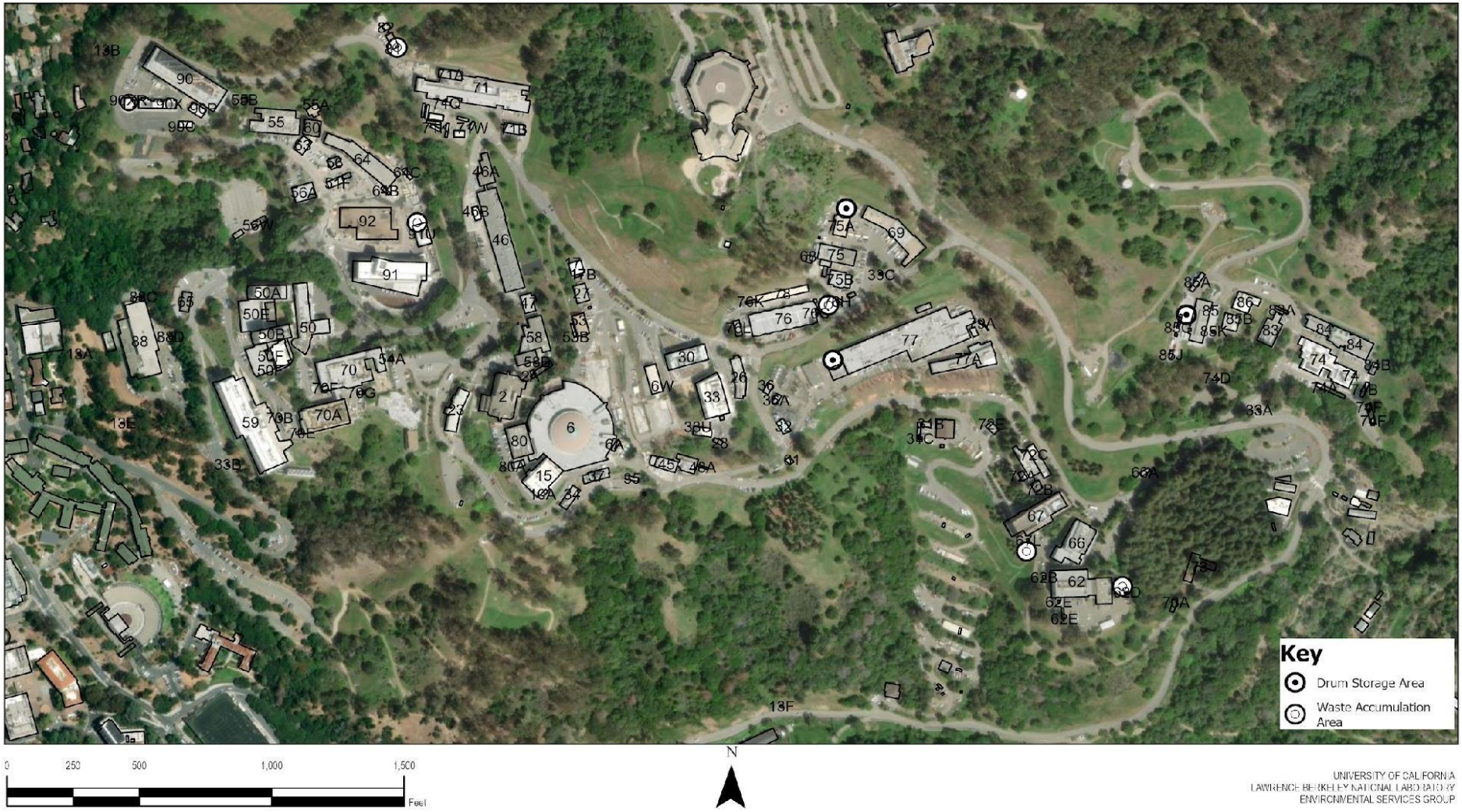

Figure 3-2. Waste Accumulation and Drum Storage Areas at Berkeley Lab

The controlled version of this document is located on the Environment, Health, and Safety Division's PowerDMS webpage.
Printed or electronically transmitted copies are not official. Users are responsible for working with the latest approved revision.

Berkeley Lab is also permitted by the City of Berkeley to operate four on-site fixed hazardous waste treatment systems where chemicals and/or wastes can be loaded or unloaded. All fixed treatment units (FTUs) below are located in a building enclosure with a roof:

- Building 70A (FTU 004): Inorganic acid waste streams treated by pH adjustment
- Building 2 (FTU 005): Inorganic acid waste streams treated by pH adjustment
- Building 77 (FTU 006): Aqueous waste containing metals and inorganic acid and caustic waste streams treated by precipitation and pH adjustment
- Building 67 (FTU 007): Inorganic acid and caustic wastewater treated by pH adjustment

3.1.2 Materials in Transit

Potential stormwater contaminants associated with transit of containers include any liquid or solid material that is used or stored at the site in a DSA and any waste stream generated at the site that is placed in a WAA in a container for disposal that could be released if a container is broken or overturned with a lid not fully closed during transit.

3.1.3 Materials Storage and Use

There are three general categories of outside storage or handling of materials at Berkeley Lab:

1. Outdoor storage
    - Storm resistant storage containers
    - WAAs
    - DSAs
    - Waste bins and scrap metal hoppers
    - Building 85, HWHF equipped with enclosed outdoor storage
2. Tanks for bulk storage of petroleum products
    - Underground storage tanks
    - Aboveground storage tanks
3. Outdoor equipment containing chemicals
    - Electrical transformers
    - Portable and non-portable electrical generators

3.1.3.1 Outdoor Storage of Materials

Potential stormwater contaminants associated with outdoor storage include any liquid or solid material that is used or stored at the LBNL site and any waste stream generated at the site that is placed in containers for disposal.

Storm-resistant storage containers used at Berkeley Lab are intermodal freight containers that house materials and equipment to eliminate potential pollutant sources from stormwater exposure. The containers

The controlled version of this document is located on the Environment, Health, and Safety Division's PowerDMS webpage.
Printed or electronically transmitted copies are not official. Users are responsible for working with the latest approved revision.

are completely roofed and walled structures that meet or exceed the permit-defined description of a storm-resistant shelter.

As depicted in Figure 3-2, there are currently five WAAs in use at Berkeley Lab. WAAs also meet the permit definition of a storm-resistant shelter and are used for temporary storage of various waste oils. WAAs are completely roofed and walled structures and are equipped with secondary containment.

Also depicted on Figure 3-2 is the location of Berkeley Lab's two DSAs. The main DSA is located at Building 85, and the other location is Building 75. Additionally, several small drum storage sheds are located throughout the facility. To the extent practical, all oil-containing product drums are stored within the sheds or at the drum storage facility. However, because of changing operations throughout the facility, small numbers of drums may periodically be stored near various buildings. Provisions have been made for the storage of these drums on secondary containment pallets, or within secondary containment drums.

Landfill, recycle, and compost bins are located at approximately 36 building locations and service surrounding buildings. The bins are equipped with water-resistant lids that are maintained in the closed position to prevent rainfall from entering the bin. LBNL staff and building managers receive training and are provided precipitation forecasts that include reminders to verify bins are closed prior to a rain event.

At any given time there are approximately 20 scrap metal bins located at about nine building locations around Berkeley Lab. The bins are used for temporary storage of scrap metal prior to being transported to Berkeley Lab's off-site Excess Materials and Recycling facility located in Richmond, California. Since 2016, the bins have been fitted with waterproof covers to eliminate the potential for rainwater accumulation inside each bin. Building managers and bin customers receive training and reminders from the Stormwater Program Manager, who also maintains an inventory of each bin location using a spreadsheet. In addition to the waterproof covers, the following signage is affixed to the bins:

- Do Not Overfill
- Keep Lid Closed With Cover Secured
- **Notice** Scrap Metal Only
- **No**:
  - Electronic Waste
  - DOE-Tagged Assets
  - Liquids
  - Chemicals
  - Trash

Loading and unloading activities at the HWHF are a potential source of stormwater pollution; however, all hazardous waste entering and leaving the HWHF is brought inside, packaged, and enclosed in secondary containment. Receptacles for solid waste and recycling may also be pollutant sources due to leaky containers or inappropriate disposal of materials.

The controlled version of this document is located on the Environment, Health, and Safety Division's PowerDMS webpage.
Printed or electronically transmitted copies are not official. Users are responsible for working with the latest approved revision.

3.1.3.2 Aboveground and Underground Tanks for Bulk Storage of Liquids

Berkeley Lab uses both aboveground and underground tanks containing liquids. As referenced in Berkeley Lab's SPCC Plan (June 2026), there are 39 aboveground and underground tanks at the site (Figure 3-3). Bulk aboveground liquid storage tanks are used for storage of diesel fuel and, in one case, E-85 fuel (i.e., 85% ethanol, 15% unleaded gasoline).

Tanks associated with the hazardous wastewater treatment at Buildings 2, 67, 70A, and 77 (FTUs 004 through 007) are also classified as aboveground tanks. Due to secondary containment that is designed to hold the quantity of liquid from the largest tank (plus sufficient freeboard designed to contain precipitation from a 25-year, 24-hour storm event), it is unlikely that the contents of aboveground tanks would be released to storm drains even if materials overflow to the tank exterior during filling or draining operations or if tanks deteriorate or become damaged (see Section 4.2.1 for more information). All petroleum aboveground storage tanks containing more than 55 gallons have secondary containment and are routinely inspected.

Six underground storage tanks are currently in use at the site, five of which store diesel fuel and one of which stores unleaded gasoline. No waste oil tanks are in use on site.

Potential stormwater pollutants associated with operation of aboveground and underground tanks at Berkeley Lab include petroleum-based fuels, transformer oil, and hazardous waste streams.

The controlled version of this document is located on the Environment, Health, and Safety Division's PowerDMS webpage.
Printed or electronically transmitted copies are not official. Users are responsible for working with the latest approved revision.

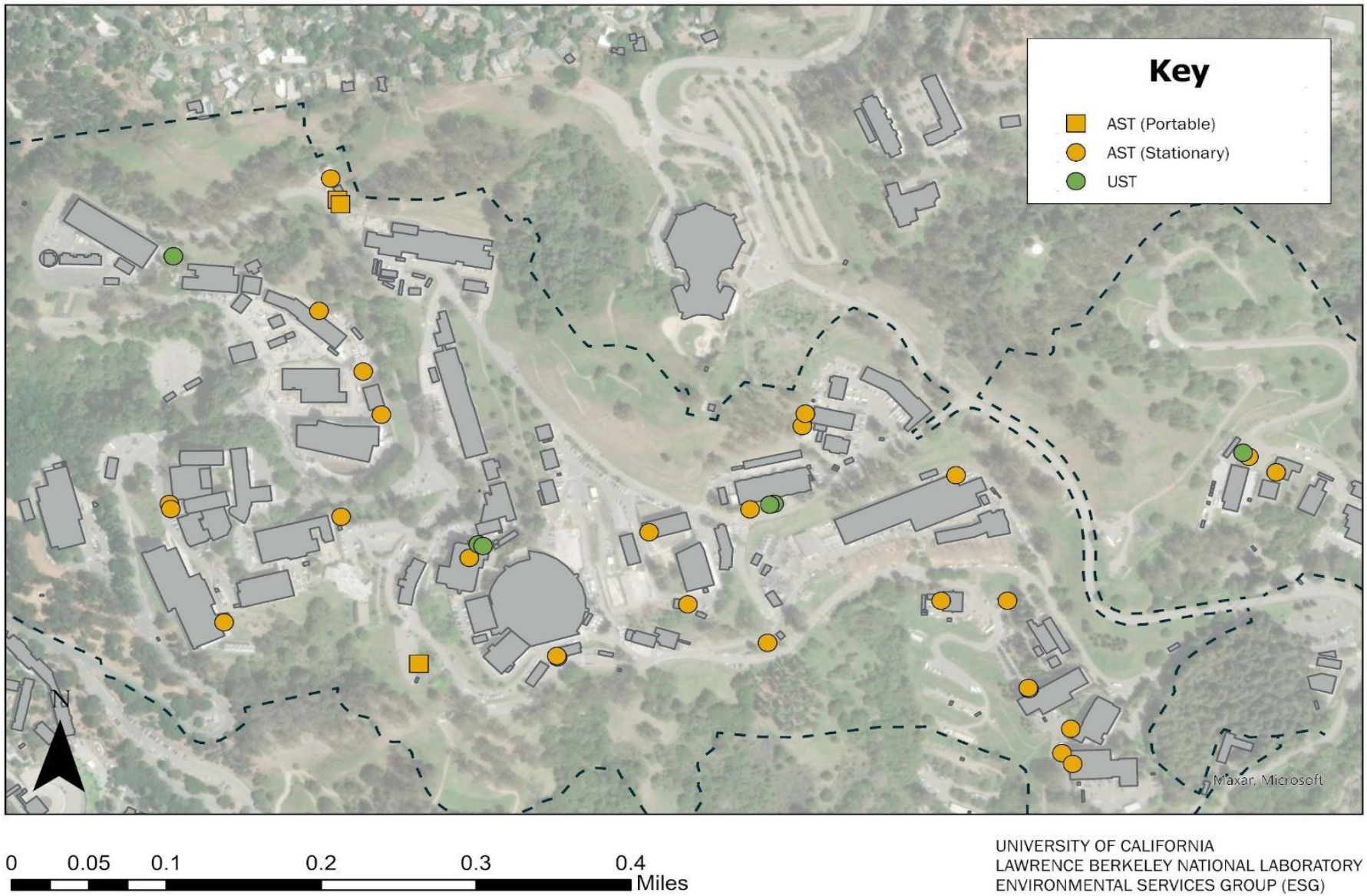

Figure 3-3. Locations of Aboveground and Underground Storage Tanks at Berkeley Lab

The controlled version of this document is located on the Environment, Health, and Safety Division's PowerDMS webpage.
Printed or electronically transmitted copies are not official. Users are responsible for working with the latest approved revision.

3.1.3.3 Outdoor Equipment

Cooling Towers and Closed-Loop Process Cooling Systems. Cooling towers and closed-loop process cooling systems may use chemicals such as descalers, biocides, chlorine, and corrosion inhibitors in water treatment.

Generators. Standby engine generators that contain petroleum-based fuels are in use at Berkeley Lab. All outdoor engine generators are equipped with secondary containment systems.

Groundwater Treatment Systems. Groundwater treatment system components such as GAC canisters are in use to remove volatile organic compounds from contaminated groundwater at several locations at the LBNL site.

Transformers. Outside electrical transformer banks are filled with transformer oil, which could be released if equipment is damaged or poorly maintained. Transformers containing more than 55 gallons have secondary containment.

3.1.4 Radionuclides

Radionuclide emissions are controlled in accordance with 40 CFR 61, Subpart H, and National Emission Standards for Emissions of Radionuclides Other Than Radon from DOE Facilities. Use is controlled in accordance with 10 CFR 835. Berkeley Lab maintains compliance with applicable requirements through the LBNL Radiological Work Authorization Program. This program tracks the use and inventory of all radionuclides at the site. The sampling and monitoring program strategy for surface water was developed to comply with applicable DOE requirements for monitoring stormwater runoff and in compliance with the General Permit. Berkeley Lab's Environmental Restoration Program additionally monitors groundwater and hydraugers. Procedures are implemented to ensure the containment of radioactivity in suitable shielding and controlled-access enclosures, and for handling and transportation of radioactive substances. Berkeley Lab maintains air-sampling and penetrating radiation monitors at various locations around the site and at the site boundary. Additionally, effluent stacks from workplaces at Berkeley Lab are monitored for specific substances.

3.2 GENERAL VEHICLE USE

A fleet of on-site facility vehicles is operated by Berkeley Lab. Personally owned and construction vehicles are also used throughout the site and parked in designated areas.

3.2.1 Vehicle Fueling, Washing, and Off-Site Servicing

Berkeley Lab performs vehicle fueling of motor pool vehicles and shuttle buses at a centralized, uncovered location at Building 76. Fleet vehicle maintenance (e.g., motor oil changes and lubrication) is conducted at off-site commercial facilities. Vehicle washing is conducted on a quarterly basis on the LBNL campus, or vehicles are washed at an off-site commercial vehicle washing facility. On-site washing of vehicles is managed by Fleet Services and is performed by an outside vendor. Potential stormwater pollutants associated with vehicle washing, fueling, operation, and parking include vehicle fuels accidentally spilled onto the fueling pad, and motor oil, grease, antifreeze (ethylene glycol), hydraulic fluid, and other vehicle fluids accidentally released on roadways and parking areas.

The controlled version of this document is located on the Environment, Health, and Safety Division's PowerDMS webpage.
Printed or electronically transmitted copies are not official. Users are responsible for working with the latest approved revision.

3.2.2 Parking/Driving

Berkeley Lab's vehicular transportation infrastructure consists of roads and vehicle parking areas and is typical of most workplaces (Figure 2-2). Potential stormwater pollutants associated with vehicles are expected to be present but in concentrations consistent with a non-transportation-related industrial facility.

3.3 CONSTRUCTION AND MAINTENANCE ACTIVITIES

Construction and maintenance activities are commonly performed at Berkeley Lab throughout the year, including new building construction, renovation, and grounds maintenance and infrastructure work such as expansion of electrical capacity and installation of tanks and other equipment.

The California NPDES General Permit for Stormwater Discharges Associated with Construction and Land Disturbance Activities (Construction General Permit) requires separate stormwater permits for construction activities totaling more than one acre in size. Berkeley Lab currently has two active construction stormwater permits for the following projects:

- Building 59 NERSC Facility Upgrade II, WDID **# 2 01C405952**
- Seismic Safety and Modernization/Transportation Hub Upgrade Project (SSM/THUP), WDID **# 2 01C395177**

Potential stormwater pollutants associated with construction activities are listed below:

- Contaminated excavated materials
- Discarded demolition and construction materials (e.g., glass, specialty papers, treated wood, gypsum wallboard)
- Dust generated during construction
- Effluent generated from saw-cutting operations
- Equipment washout residue (cement trucks and smaller containers, cleanup of paints, caulking compounds and sealants, adhesives)
- Eroded soil and sediment
- Excavated materials (dirt, gravel, asphalt, concrete)
- Improperly maintained heavy equipment that may leak
- Lead- or asbestos-containing construction materials
- Mud or soil spread beyond the boundaries of the construction site by truck traffic
- New fill or roadbed material stockpiled awaiting placement
- Spillage from containers of liquid chemicals such as paints, coating materials, adhesives, and caulking compounds
- Wash water from concrete form construction and pouring operations
- Portable generators with fuel tanks

The controlled version of this document is located on the Environment, Health, and Safety Division's PowerDMS webpage.
Printed or electronically transmitted copies are not official. Users are responsible for working with the latest approved revision.

3.4 SIGNIFICANT SPILLS AND LEAKS

Section (X.G.1.d.ii.a) of the General Permit requires the SWPPP to include a description of materials that have spilled or leaked in significant quantities in stormwater discharges or non-stormwater discharges within the previous 5-year period. Although neither the General Permit nor the California Office of Emergency Services (Cal OES) define what volume quantifies a significant spill or release, Berkeley Lab has adopted a 50,000-gallon volume criteria that is consistent with spill or release impacts to applicable water quality standards cited in the General Permit and the NPDES Drinking Water Permit. The table below summarizes Berkeley Lab's only significant release within the last 5 year period. The release listed below was reported to Cal OES and local agencies.

Date	Description	Type	Approximate Volume (gallons)
September 6, 2026	Potable water release from a broken pipe connection.	Drinking Water	353,786

Form 4 of the Annual Report (part of the Annual Comprehensive Site Compliance Evaluation) includes a comprehensive overview of the spills and leaks that have occurred at the LBNL site.

3.5 POLLUTANT SOURCE ASSESSMENT

Berkeley Lab's PSAs are conducted to gain a thorough understanding of industrial use areas in order to identify all potential industrial pollutant sources resulting from exposure to stormwater. To complete each PSA, Berkeley Lab's Stormwater Program Leader conducts detailed walkthroughs to identify all industrial activities exposed to stormwater and evaluate the effectiveness of existing stormwater controls or the need for additional controls, and the direction of stormwater flow to discharge locations. Walkthroughs are performed weekly, monthly, annually, and on an ad hoc basis, in both dry weather and during rain events in order to observe the flow of stormwater at industrial use areas and discharge locations.

The Stormwater Program Leader also interviews Berkeley Lab staff at both industrial and non-industrial use areas who may be more familiar with daily operations or provide updates for activities that may not be performed on a daily basis.

Berkeley Lab's operations are typically stable and do not experience seasonal operational changes. In the event existing operations change or new operations are implemented at Berkeley Lab, a new PSA will be performed and appropriate changes, if any, will be included in a revised edition of the SWPPP and SMIP.

Based on the August and September 2026 PSA walkthroughs, four potential point-source areas of industrial activity conditionally subject to the General Permit's monitoring requirements were identified as provided below:

1. **Building 69** – Shipping and Receiving
2. **Building 69** – Central Chemical Receiving Facility
3. **Building 76** – Fuel-Dispensing Station at the Facilities Building
4. Building 85 – HWHF

The controlled version of this document is located on the Environment, Health, and Safety Division's PowerDMS webpage.
Printed or electronically transmitted copies are not official. Users are responsible for working with the latest approved revision.

Although each of these activity areas is auxiliary to Berkeley Lab's primary function as a non-commercial research organization, they require permit coverage because they are located at Berkeley Lab and are industrial in nature or associated with industrial activity.

Further review and evaluation of these potential point sources during the recent PSA resulted in a final determination of industrial activity at the following locations:

1. **Building 76** – Fuel-Dispensing Station at the Facilities Building (Figure 3-4)
2. **Building 85** – HWHF (Figure 3-5)

Section 3.6 provides a summary table of the analytical parameters for each industrial use area. The analytical parameters listed include permit-required parameters and parameters added to the monitoring location based on the most recent sitewide PSA.

3.5.1 Industrial Activity Areas

3.5.1.1 Building 76 Fuel Dispensing Station

As described in Section 3.2.1, Berkeley Lab performs vehicle fueling at the fuel-dispensing island located outside of Building 76. The dispensing island is equipped with three fuel dispensing pumps: one each for diesel fuel, unleaded gasoline, and E-85 (flex fuel). These dispensers supply fuel to Berkeley Lab's fleet of shuttle buses and motor pool vehicles.

Several structural and administrative stormwater controls are in place at the fueling station to eliminate or reduce the potential for introduction of pollutants into stormwater runoff. A summary and description of the controls is provided below:

- **Oil / Water Separator Trap and Discharge Compartments** – The purpose of the separator is to collect gasoline and diesel fuel released by accidental spills in the fueling area and to prevent their entry into the stormwater conveyance system. The separator consists of two compartments: the trap compartment collects any accidental fuel runoff, and the discharge compartment allows treated water from the trap compartment to enter the downstream stormwater conveyance system.
- **Oil / Water Separator Maintenance** – Berkeley Lab's Facilities Division Operating Procedure MA.MG.PRC.328 Bldg. 76 Motor Pool – Fuel Spill Containment Basin (see Appendix I) provides for maintenance of the separator by the Facilities Division Plant Maintenance Technicians (PMTs). Per the procedure, the PMTs service and maintain the separator on a weekly, monthly, and quarterly basis.
- **Drain Inlet Insert Equipped With Oil and Grease (O&G) Treatment Media** – The separator's storm drain inlet is equipped with a stainless-steel frame equipped with mesh pouches that hold O&G-absorbent socks. Stormwater runoff entering the separator's drain inlet must first pass through the absorbent socks for treatment.
- **Drain Inlet Grate Equipped with Filter Fabric** – The separator's storm drain inlet is equipped with filter fabric to trap and filter out suspended solids from entering the separator vault.
- **Drain Inlet Perimeter Protection** – A compost filter sock (Filtrexx EnviroSoxx) is installed around the perimeter of the drain inlet. The sock is a tubular mesh device filled with treatment media that helps

The controlled version of this document is located on the Environment, Health, and Safety Division's PowerDMS webpage.
Printed or electronically transmitted copies are not official. Users are responsible for working with the latest approved revision.

remove hydrocarbons, heavy metals, bacteria, and nutrients. Stormwater runoff entering the separator's drain inlet must first pass through the compost sock for treatment.

- **Drain Inlet Barricade and Signage** – A traffic barricade equipped with a retroreflective sign that reads "Do Not Tamper With Stormwater Controls" is located on top of the drain inlet both as a stormwater awareness mechanism and also to prevent tampering with stormwater controls so that they may function as designed and installed.
- **Spill Kit Located at the Fuel Dispensing Station** – A spill kit located at the dispensing station is utilized whenever there is a minor spill of fuel. The kit includes one drum of new, unused absorbent material for dispersal on a spill, and another drum, which contains used absorbent and waste material.

Berkeley Lab designates the stormwater monitoring point located at the fuel dispensing island as Monitoring Point 2 **(MP-2)**. In accordance with General Permit Section XI.B.6 and based on thorough reviews of stormwater control effectiveness, historical stormwater data collected at MP-2, and the auxiliary nature of the fuel dispensing station relative to the primary function of Berkeley Lab, the following permit-required analytical parameters will be monitored at **MP-2**:

- pH
- O&G
- Total Suspended Solids (TSSs)

Based on the 2026 PSA interviews conducted with Facilities PMTs who are responsible for the fueling station maintenance and a review of current housekeeping, storage, and materials management, no additional PSA-derived analytical parameters were identified at **MP2**.

The controlled version of this document is located on the Environment, Health, and Safety Division's PowerDMS webpage.
Printed or electronically transmitted copies are not official. Users are responsible for working with the latest approved revision.

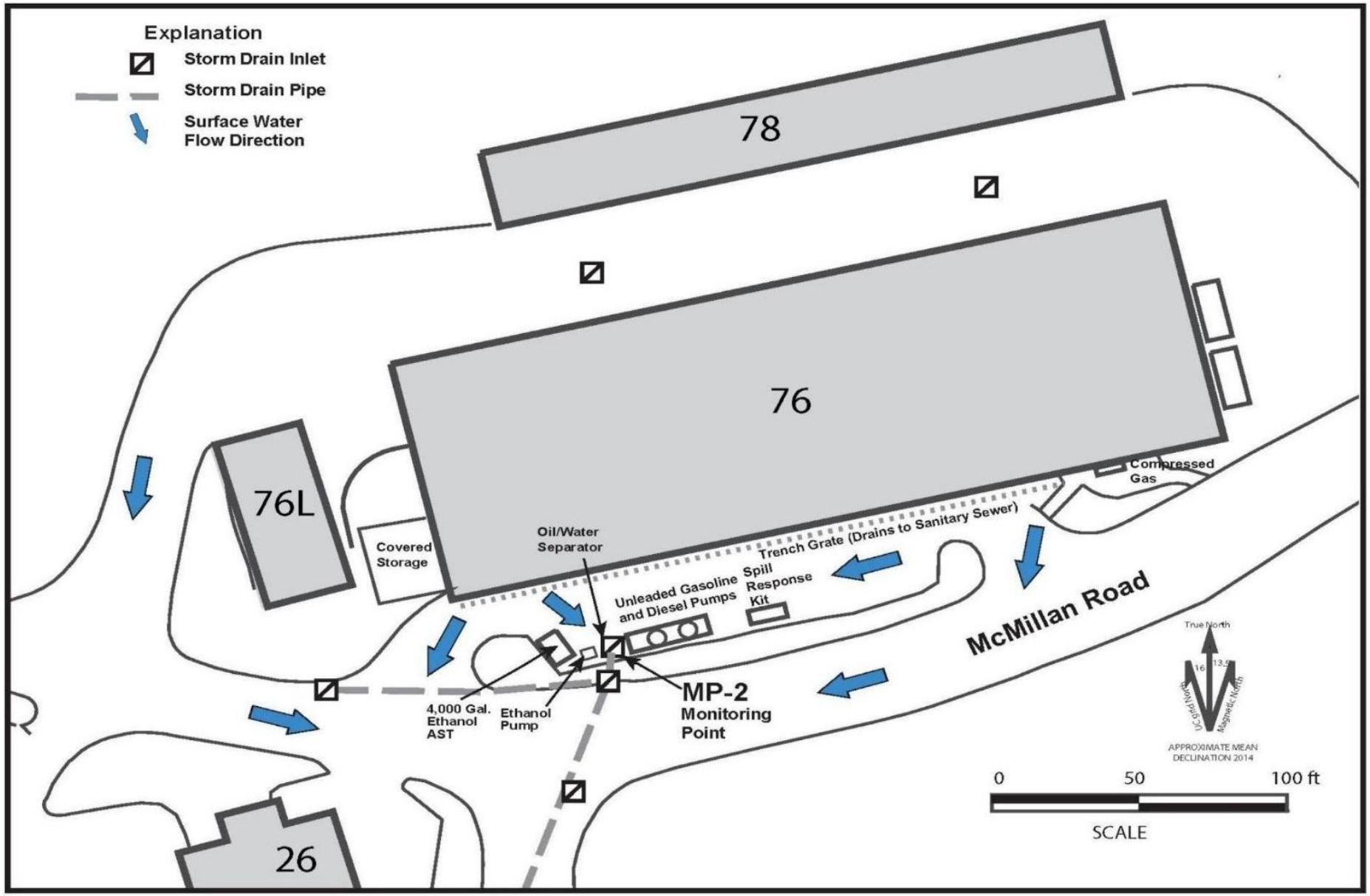

Figure 3-4. Stormwater Monitoring Point MP-2 At Building 76 Fuel Dispensing Area

The controlled version of this document is located on the Environment, Health, and Safety Division's PowerDMS webpage.
Printed or electronically transmitted copies are not official. Users are responsible for working with the latest approved revision.

3.5.1.2 Building 85 HWHF

Building 85 is Berkeley Lab's HWHF that provides a range of waste management services to Berkeley Lab staff. The facility is operated by WMG, which minimizes waste where practical and manages waste generated at Berkeley Lab in compliance with applicable regulations. Each year, Berkeley Lab reviews hazardous waste-generating processes to look for waste avoidance or minimization opportunities. As a government-owned facility operated through contract by the University of California, Berkeley Lab must comply with waste minimization reporting requirements issued by the Department of Energy (DOE) and the State of California. Guiding documents for Berkeley Lab's hazardous waste management program include the LBNL *Waste Management Program Manual* and the facilities Resource Conservation and Recovery Act (RCRA) Part B permit. Berkeley Lab maintains a hazardous waste management program, which specifies policies and procedures for handling and containment of hazardous wastes.

Materials for disposal are transported to Building 85 for handling and storage from both satellite accumulation areas (SAAs) and WAAs. Upon arrival at Building 85, materials are immediately brought inside the enclosed facility. Stored materials are manifested and prepared for transportation to an off-site disposal facility. Repackaging of materials prior to shipment is conducted inside the building, but there is no destruction or disposal of materials at the facility.

Wastes are collected and handled such that they are contained at all times and protected from rainfall. Therefore, they are not potential contaminants of stormwater runoff except in the case of accidents.

Building 85 has an upper and lower yard, each equipped with a valved sump that controls discharges to the stormwater conveyance system. In the event of a spill, the normally closed sumps collect spilled materials to prevent discharge to the stormwater conveyance system. In the event of a spill, analytes would be selected based on the contents of the spilled material. EHS Procedure 870 (see Appendix J) provides the overview and procedures for sump management.

In accordance with General Permit Section XI.B.6 and based on thorough reviews of stormwater control effectiveness, historical stormwater data collected at both MP-4 and MP-5, and the auxiliary nature of waste management relative to the primary function of Berkeley Lab, the following permit-required analytical parameters will be monitored at **MP-4** and **MP-5**:

- pH
- O&G
- TSSs

Based on the 2026 PSA interviews conducted with the HWHF Operations Manager and a review of current housekeeping, storage, and materials management, no additional PSA-derived analytical parameters were identified at **MP-4** and **MP-5**.

The controlled version of this document is located on the Environment, Health, and Safety Division's PowerDMS webpage.
Printed or electronically transmitted copies are not official. Users are responsible for working with the latest approved revision.

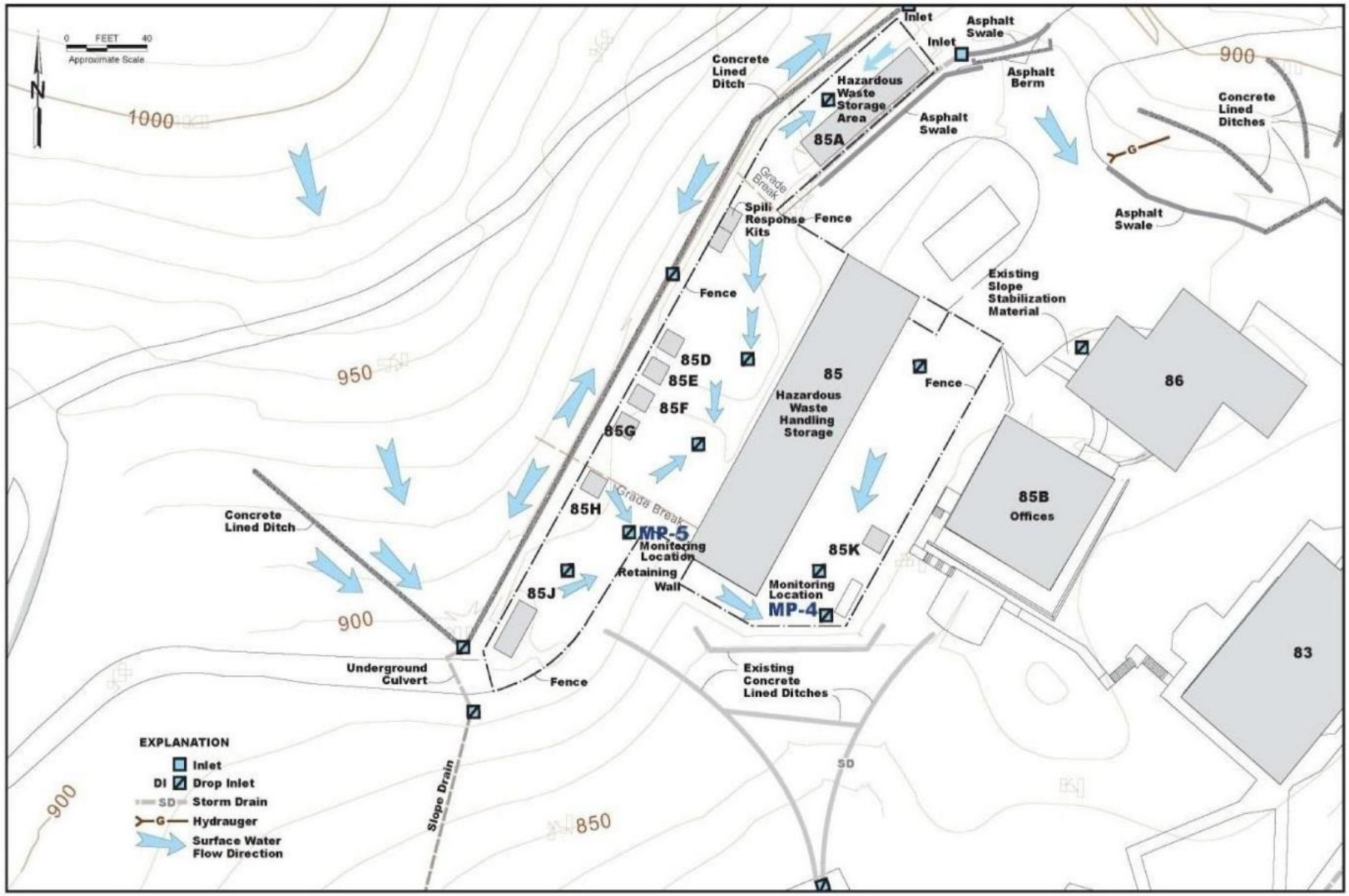

Figure 3-5 Stormwater Monitoring Point MP-4 and MP-5 at the Hazardous Waste Handling Facility

The controlled version of this document is located on the Environment, Health, and Safety Division's PowerDMS webpage.
Printed or electronically transmitted copies are not official. Users are responsible for working with the latest approved revision.

3.5.2 No Exposure Determinations at Industrial Use Areas

As stated in Section 3.5, during Berkeley Lab's 2026 PSA evaluations of the four industrial activity use areas, Building 69 –Shipping and Receiving and Central Chemical Receiving Facility were determined to be not pollutant point sources for industrial activities.

General Permit Section XVII – Conditional Exclusion – No Exposure Certification (NEC) sets forth requirements for NEC eligibility. Although NEC certification is only available on a facility-wide basis and not for individual outfalls, any drainage areas at the facility that would otherwise qualify for NEC coverage should be evaluated in the SWPPP with a declaration that no industrial materials or activities are, or will be in the foreseeable future, exposed to precipitation.

Section XVII.B provides the following definitions:

- **No Exposure** – All Industrial Materials and Activities are protected by a Storm-Resistant Shelter to prevent all exposure to rain, snow, snowmelt, and/or runoff
- **Industrial Materials and Activities** – includes, but is not limited to, industrial material handling activities or equipment, machinery, raw materials, intermediate products, byproducts, final products, and waste products
- **Material Handling Activities** – includes the storage, loading and unloading, transportation, or conveyance of any industrial raw material, intermediate product, final product, or waste product
- **Sealed** – banded or otherwise secured, and without operational taps or valves
- **Storm-Resistant Shelters** – includes completely roofed and walled buildings or structures. Also includes structures with only a top cover supported by permanent supports but with no side coverings, provided material within the structure is not subject to wind dispersion (sawdust, powders, etc.), or track-out, and there is no storm water discharged from within the structure that comes into contact with any materials

3.5.2.1 Building 69 Shipping and Receiving

Building 69 is Berkeley Lab's Shipping and Receiving and Central Chemical Receiving Facility (CCRF). The Shipping and Receiving portion of Building 69 houses the central mailing and distribution service for picking up, sorting, and delivering Berkeley Lab's interoffice, domestic, and international mail. The eastern portion of Building 69 houses Berkeley Lab's CCRF, which facilitates and controls the arrival and storage of hazardous chemicals and gases at Berkeley Lab. The CCRF provides chemical management and radio frequency identification (RFID) tagging of chemicals for an accurate chemical management system (CMS) inventory. Building 69 is an enclosed structure, and the facility's loading dock and CCRF are completely enclosed and covered by a roof. All shipping, receiving, and chemical inventory management is conducted inside, with all vehicle loading and unloading operations performed at the covered loading dock.

Based on the criteria and definitions provided in Section XVII of the General Permit, interviews with Building 69 staff, and observations of both housekeeping and work practices, the Building 69–specific PSA in August 2026 resulted in the determination that although industrial activity may occur at Building 69, there is no reasonable expectation of an industrial pollutant point source from this location.

The controlled version of this document is located on the Environment, Health, and Safety Division's PowerDMS webpage.
Printed or electronically transmitted copies are not official. Users are responsible for working with the latest approved revision.

3.6 SUMMARY OF ANALYTICAL PARAMETERS FOR MONITORING POINTS LOCATED AT INDUSTRIAL USE AREAS

Table 3-1 Summary of Analytical Parameters for Monitoring Points Located at Industrial Use Areas

Industrial Use Area	Description of Industrial Activity	General Permit-Required Analytes	Additional Analytes Based on PSA
Building 76 (MP-2)	Fuel-Dispensing Station	pH O&G TSSs	None identified
Building 85 (MP-4 and MP-5)	Hazardous Waste Handling Facility	pH O&G TSSs	None identified

The controlled version of this document is located on the Environment, Health, and Safety Division's PowerDMS webpage.
Printed or electronically transmitted copies are not official. Users are responsible for working with the latest approved revision.

4 Best Management Practices

Protection of water quality includes maintaining desired uses such as swimming and fishing, and preserving aesthetic parameters such as cleanliness of the watershed areas and clarity of water. The Water Quality Control Plan for the San Francisco Bay Basin, known as the Basin Plan, is prepared by the RWQCB. It defines the various watersheds within the area and establishes the beneficial uses, which are to be supported by the water quality goals. Per the Basin Plan, Berkeley Lab lies within the Strawberry Creek watershed, which is located within the San Francisco Bay Central Basin. Based on the latest 2022 RWQCB receiving water mapping tool, the Strawberry Creek watershed is designated with beneficial uses for cold water habitat (COLD), for spawning waters (SPWN), and for migratory waters (MIGR), and is considered high risk for receiving discharges.

BMPs are defined as General Permit–required actions that prevent or reduce the amount of pollution generated by non-point sources to levels compatible with water quality goals. An essential component of protecting water quality is the elimination of pollutants such as contaminants from industrial activities, O&G, non-naturally occurring metals, oxygen-demanding substances such as plant debris, radioactive substances, and bacteria and viruses in the water system.

Two categories of BMPs are usually considered for reducing pollutants in stormwater: minimum or nonstructural and advanced or structural BMPs. These two categories of BMPs are described in the sections below, followed by descriptions of the LBNL-implemented BMPs within these categories that are associated with the potential sources of stormwater pollution listed in Section 3.

4.1 MINIMUM BMPS

Minimum or nonstructural BMPs are programs developed and implemented by facility personnel to eliminate or significantly reduce contact between the pollutant and stormwater. Nonstructural BMPs include assignment of responsibilities and authorities to implement the SWPPP (Section 1.5.3), housekeeping (Section 4.1.1), preventive maintenance of equipment and structures (Section 4.1.2), spill prevention and response programs to adequately respond to unplanned releases (Section 4.1.3), material management (Section 4.1.4), training for employees to identify and eliminate pollutants in stormwater (Section 4.1.5), hazardous materials and waste management (Section 4.1.6), recordkeeping to demonstrate a record of compliance with stormwater protection measures (Section 4.1.7), erosion and sediment controls (Section 4.1.8), implementation of inspections (Section 4.1.9), and stormwater construction and maintenance activities (Section 4.1.10 and Section 5).

4.1.1 Housekeeping

Inspection and cleaning of material handling areas and areas where stormwater is discharged is conducted on a routine basis. Programmatic organizations are responsible for their own areas. Litter control, pickup for disposition off-site, and sweeping of soiled areas are carried out to reduce the potential for pollutants to enter stormwater. Targeted cleanup is usually conducted before the storm season to prevent storm drain

The controlled version of this document is located on the Environment, Health, and Safety Division's PowerDMS webpage.
Printed or electronically transmitted copies are not official. Users are responsible for working with the latest approved revision.

conveyance systems from becoming obstructed with organic materials such as leaves, trash, and brush. As noted in Sections 3.1.3.1 and 3.5.1.2, a program has been initiated to assist divisions and buildings in either eliminating unnecessary waste storage or ensuring that dumpsters and hoppers are covered or under shelter.

4.1.2 Storm Drain Conveyance System Maintenance

Emergency maintenance of stormwater-related facilities is carried out by Facilities Division crews as needed.

Routine and scheduled inspections by Facilities Division crews and EHS staff – especially before the storm season begins and before and during expected major storms – provide the feedback to schedule preventive maintenance that is designed to ensure continued serviceability of the stormwater system. Preventive maintenance of storm drains, culverts, and other control structures is conducted to remove materials such as trash, brush, leaves, and water-borne solids that settle out to maintain unimpeded flow.

The following BMPs have been implemented for LBNL storm drain maintenance at the site:

- Operations and maintenance crews patrol the site during business hours to ensure that storm drain structures remain clear of storm-induced debris, and that flow remains unimpeded.
- Common hand tools, such as shovels and rakes, supported by powered equipment, such as a backhoe, are available for stormwater system maintenance.
- Other personnel on site during off hours are also required to report LBNL storm drainage problems, should they occur.
- During normal working hours, the LBNL site is highly populated and additional reports of storm-related problems may be received from any employee or guest
- Before the rainy season each year, some of the storm drain catch basins are cleaned. A mechanical vacuum truck or manually operated wet/dry industrial vacuum may be used to perform this work.

A passive filtration sock (Filtrexx EnviroSoxx) specifically designed for heavy metals removal is installed at the Building 76, Fuel Dispensing **(MP-2)** stormwater monitoring point. The maintenance schedule for passive filtration socks is at a minimum as suggested by the manufacturer maintenance manual, or more often as determined by the routine and scheduled inspections by Facilities and EHS personnel, or as described in Section 4.1.9.

4.1.3 Spill Prevention and Response

Berkeley Lab's Master Emergency Plan and HMBP provide response procedures for hazardous releases of chemical, biological, and radiological materials.

Spill prevention and response to oil spills are addressed in the LBNL SPCC Plan. The SPCC Plan details the history of past spills and assesses the potential for future spills. Secondary containment requirements and design criteria are specified for aboveground and underground tanks, oil-filled electrical equipment, drum storage, and other miscellaneous containers. Operational practices such as bulk transfer are described, and inspections and preventive maintenance of facilities are in effect to prevent leakage and spillage. Supervision and training for personnel who are involved in spill prevention and cleanup are specified.

The controlled version of this document is located on the Environment, Health, and Safety Division's PowerDMS webpage.
Printed or electronically transmitted copies are not official. Users are responsible for working with the latest approved revision.

Procedures for responding to, reporting, and sampling of non-hazardous releases can be found in ESG Procedure 260, *Spill Response Sample Collection.* Standard practices to contain spillage from aboveground tanks, drums, and storage areas include containment structures such as berms that trap any reasonably possible leakage before it can flow into the storm drain system. Bulk storage areas are designed to minimize the possibility of leakage, and are sheltered to minimize potential impact to stormwater.

4.1.4 Materials Management

Materials management activities include all loading and unloading of materials, transit between storage and use locations, storage and use of materials, and special management activities associated with radionuclides.

4.1.4.1 Loading and Unloading

Handling and spill containment procedures are designed to recognize and manage risks associated with container breakage and spillage during loading and unloading and proper response if an accident does occur.

Procedures for safe handling of materials during loading and unloading are specified in the LBNL *Packaging and Transportation Safety Manual*. This manual includes instructions that address spill containment, emergency response, and reporting requirements.

The following BMPs have been implemented for material loading and unloading activities at Berkeley Lab:

- Materials are handled only in designated and dedicated materials loading and unloading areas that provide adequate access and aisle space for safe handling.
- Appropriate equipment for moving containers is available and maintained in good working condition.
- Procedures and training for container handling, equipment use, inspection, and spill response are provided to all personnel responsible for materials handling.

4.1.4.2 Materials in Transit

Chemicals are handled from the time they are received on site, through transport to users' laboratories or support facilities, to disposition into a managed and monitored waste stream in accordance with the HMBP and documents referenced in it. Procedures are provided to prevent accidental releases, including into stormwater drainage systems. Although not required by statute, Berkeley Lab voluntarily submits a chemical inventory list in the HMBP annually to the City of Berkeley.

Handling and spill containment procedures are designed to recognize and manage risks associated with chemical transport, which include damage to and breakage of containers during transport and during a major vehicle accident or minor collision, unattended loads, and receipt and transport of damaged containers.

Procedures for safe handling of materials traveling between storage areas and ultimate users or disposal are specified for LBNL transportation personnel. Drivers who handle hazardous materials must be trained and receive California Department of Motor Vehicles certification for hazardous materials handling. Spill containment, reporting, and calling in emergency response services are included in the instructions and training for these drivers.

The controlled version of this document is located on the Environment, Health, and Safety Division's PowerDMS webpage.
Printed or electronically transmitted copies are not official. Users are responsible for working with the latest approved revision.

The following BMPs have been implemented for LBNL activities involving materials in transit at the site:

- Drivers of vehicles containing hazardous materials are specially trained on proper container handling and lifting, package integrity, container receipt, and spill response procedures.
- Only specialized vehicles are used for transport of chemicals, which allows loads to be properly secured in a manner appropriate for the type of container being transported.
- Speed limits on the site are 15 miles per hour or less and are clearly posted throughout the site.
- Vehicles with loads in transit are not left unattended.
- All deliveries of hazardous materials, including those within site boundaries, are accompanied by shipping and receiving documentation.

4.1.4.3 Materials Storage and Use

Every location used for outside storage of any material is under the specific control and responsibility of an LBNL operating organization (a department or division). Procedures for proper handling and appropriate storage of each substance are specified, and inspections for compliance are carried out by the EHS Division. In general, the management of materials is conducted in containers, tanks (above- and underground), and equipment. Berkeley Lab's policy is to conduct research operations indoors as much as practical. However, given the loading and unloading activities of hazardous wastes at Building 85, the HWHF is still a potential source of stormwater pollution. Sitewide general BMPs include the following:

- Berkeley Lab's hazardous waste management program specifies procedures for handling and containment of hazardous wastes.
- Any leakage from containers, aboveground or underground tanks, or electrical equipment is identified and noted for cleanup during routine site inspections or by any personnel working in the area where the release has occurred.
- Stormwater inspections and housekeeping are carried out during times of minimum parking occupancy when the ground surfaces are most exposed for visual inspection.
- Stormwater that is collected in WAA or tank secondary containment basins or traps is visually inspected for evidence of pollution, as from equipment leakage, before being released to the storm drain system.

BMPs specific to material storage and use are listed below.

Containers (trash dumpsters and hoppers). Employees are trained on proper disposal of hazardous materials and wastes. All large metal trash dumpsters have been labeled with signage that reminds employees to keep lids closed. Through training and outreach in LBNL publications, employees are made aware that trash containers and metal hoppers should be kept closed when not in use and/or stored under a roof or overhang to prevent rainwater from getting into the container and possibly leaking out.

Groundwater Treatment Systems. Groundwater treatment system components are routinely inspected, and maintenance is conducted to minimize leaks and damage, which could result in releases.

The controlled version of this document is located on the Environment, Health, and Safety Division's PowerDMS webpage.
Printed or electronically transmitted copies are not official. Users are responsible for working with the latest approved revision.

4.1.4.4 Radionuclides

Radionuclide emissions are controlled in accordance with 40 CFR 61, Subpart H, National Emission Standards for Emissions of Radionuclides Other Than Radon from DOE Facilities. Use is controlled in accordance with 10 CFR 835. Berkeley Lab maintains compliance with applicable requirements through the LBNL Radiological Work Authorization Program. This program tracks the use and inventory of all radionuclides at the site. The sampling and monitoring program strategy for surface water was developed to comply with applicable DOE requirements for monitoring stormwater runoff and in compliance with the General Permit. Berkeley Lab's Environmental Restoration Program additionally monitors groundwater and hydraugers.

Procedures are implemented to ensure the containment of radioactivity in suitable shielding and controlled-access enclosures, and for handling and transportation of radioactive substances. Berkeley Lab maintains air-sampling and penetrating radiation monitors at various locations around the site and at the site boundary. Additionally, effluent stacks from workplaces at Berkeley Lab are monitored for specific substances.

4.1.4.5 Vehicles

Employee and visitor cars; contractor vehicles, including cars and trucks; and LBNL vehicles are parked at the site. LBNL vehicles include cars, pickup trucks, shuttle buses, delivery and transportation vehicles, and fire trucks. Potential stormwater contaminants associated with vehicles include fuel, coolant, lubricants, and hydraulic fluids, which may leak from vehicles onto paved and unpaved areas.

4.1.4.6 Parking

Paved parking area surfaces are maintained in good condition to prevent erosion and, if necessary, may be cleaned using street sweepers. Minor areas where pavement may become degraded are patched. Parking lot inspections are conducted at least monthly during the rainy season to identify degraded or stained areas that could result in impact to stormwater during the rainy season.

4.1.5 Employee Training

All LBNL employees receive orientation and training at the time of hire and as part of their continuing employment. It is the responsibility of supervisors to ensure that their subordinates are aware of applicable requirements and documented instructions that apply to their work. It is also the responsibility of supervisors to ensure that any training requirements have been carried out for each employee before they perform work without direct supervision.

Through various forms of outreach (e.g., articles in the LBNL daily online newsletter, or labels on storm drains), employees are made aware of the requirements for protection of the storm drain system from pollutants, and of the importance of proper disposal of waste materials. Often the first observers and responders to emergencies, they are made aware of the appropriate actions to take and how to report the emergency.

All Facilities Division personnel receive periodic training in environmental and safety issues. One form of this training is via regular safety meetings. Another form is formal training courses including Stormwater Management (EHS0690) and Spill Prevention Control and Countermeasures (EHS0680). This training is linked to Berkeley Lab's Work Planning and Control (WPC) database and is a requirement for all construction

The controlled version of this document is located on the Environment, Health, and Safety Division's PowerDMS webpage.
Printed or electronically transmitted copies are not official. Users are responsible for working with the latest approved revision.

managers and targeted facilities personnel such as bus drivers, custodians, excess program laborers, grounds crew, laborers, PMTs, plumbers, riggers, and truck drivers. Additionally, special training for emergency responders is provided as described in Berkeley Lab's HMBP, and the Protective Services Division has a response protocol for identifying and reporting personally owned vehicles that are observed leaking fluids.

Schedules. Training schedules for each employee, beginning at the time of hire, are formulated and maintained in a sitewide database. The Stormwater Management (EHS0690) course is given on a quarterly basis, and is a biennial requirement for all trained personnel. The new-hire training is carried out by the EHS Division.

Spill Response. Training in emergency spill response, ranging from reporting and initial steps to backup and cleanup by emergency response personnel, is provided as appropriate to the responsibilities of and operations conducted by each employee. In general, emergency response is provided by the LBNL Fire Department, with backup from the EHS Division.

Stormwater Monitoring. Personnel who collect and process samples of stormwater discharge receive training as specified in ESG Procedure 263, *Stormwater Monitoring and Creek (VOC) Monitoring.*

4.1.6 Hazardous Materials and Waste Management

Hazardous Materials (see also Section 4.1.4). Materials management programs exist for the safe and appropriate handling of all materials used at Berkeley Lab. Specific procedures are provided for safe lifting, maintenance of packaging integrity, and proper storage. Materials are handled in a manner to ensure that they remain contained at all times and are only handled by trained personnel.

Hazardous Waste. Berkeley Lab has implemented a hazardous waste management program, which specifies procedures for handling and containment of hazardous wastes. Such wastes are collected and handled in such a way that they remain contained at all times. Therefore, they are not potential contaminants of stormwater runoff except in the case of accidents. The guiding documents for this program include the LBNL *Waste Management Program Manual* and the DTSC Part B permit for the HWHF.

Hazardous waste is handled by the EHS Division WMG. Waste is accumulated inside buildings in SAAs or in WAAs (Figure 3-2) that are maintained locally by program personnel. These WAAs are inspected at least weekly, and the HWHF (Building 85) and FTUs are inspected on each facility operating day by their respective operators. Inspections are documented and results reviewed.

Waste minimization is part of Berkeley Lab's Environmental Management System and is carried out as an integral part of LBNL operations. The main benefits of this program with respect to stormwater protection are reduction in the quantity of potential pollutants in the waste stream resulting from operations, and systematic waste handling practices such as compaction, packaging, and transportation that preclude escape of pollutants onto the ground or into the air (where they could become mixed with stormwater).

4.1.7 Record Keeping

Records of the operations of all LBNL organizations, for the purposes of this Plan, consisting of design, required inspections, maintenance and repair, and procedural instructions are maintained in accessible form by the respective responsible departments or divisions. These records will be retained in accordance with

The controlled version of this document is located on the Environment, Health, and Safety Division's PowerDMS webpage.
Printed or electronically transmitted copies are not official. Users are responsible for working with the latest approved revision.

regulatory and DOE recordkeeping and archival requirements; at a minimum, records of all stormwater monitoring information must be retained for at least 5 years. The locations of the records relating to this SWPPP are listed in Table 4-1.

Table 4-1. Records Locations

Record Type	Maintainer of Record	Location (Building/Room)
Facility Inspections	Facilities Division; Operations and Maintenance	PMTs Office, Building 76, Room 123B
Monitoring Data	EHS Division; Environmental Services Group	Stormwater Program Leader's Office, Building 75B, Room 115
Operational Logs	Facility Division; Operations and Maintenance	PMTs Office, Building 76, Room 123B

4.1.8 Erosion Control (Soil Stabilization)

Erosion control, also referred to as soil stabilization, consists of BMPs that are designed to prevent soil particles from detaching and becoming transported in stormwater runoff. Pursuant to the General Permit, Berkeley Lab implements erosion control BMPs at locations where soil erosion or sediment mobilization may occur as a result of soil weathering, locations of site maintenance or improvements, and locations of authorized non-stormwater discharges.

Emergency erosion control during storms is performed by the Facilities Division. Examples of such emergency erosion control measures are the use of sandbags, hand tools, and earth-moving equipment to maintain directed stormwater flows, and plastic sheeting to protect unstable slopes.

Standard erosion control practices are also implemented at construction sites. Specifications for slope protection and erosion control, and other BMPs, are incorporated into contracts for outside contractors on larger projects. Section 01020 of the LBNL General Specifications, Division I includes guidelines for erosion control during construction projects.

Sufficient erosion control materials will be maintained on site to allow implementation of the SWPPP and for rapid response resulting from failures or emergencies. Inspections of the BMPs should be conducted by pollution prevention team personnel before the wet-weather season and after significant storm events to ensure that the BMPs are installed correctly, they are in the correct locations, and they are functioning as designed.

4.1.8.1 Erosion Control BMPs

Preserve Existing Vegetation. Existing vegetation should be preserved to bind soil particles and provide erosion and sediment control benefits. The Association of Bay Area Governments and Forest Practices standards for erosion control are used as necessary in the vegetation management program. Existing irrigation systems should be maintained, equipment should be stored away from trees to prevent trunk damage, and equipment and parking areas should be located in designated areas to reduce root compaction.

Lined Ditches and Drainage Swales. Existing concrete-lined ditches are located on vegetated slopes to convey surface water runoff to stormwater inlets. The concrete-lined ditches are located vertically and horizontally

The controlled version of this document is located on the Environment, Health, and Safety Division's PowerDMS webpage.
Printed or electronically transmitted copies are not official. Users are responsible for working with the latest approved revision.

across slopes to intercept sheet flow and divert runoff to storm drain inlets. Existing asphalt drainage swales are located along selected paved roads and below steep grades where runoff begins to concentrate to convey stormwater runoff to storm drain inlets.

Slope Drains are used at the site to intercept and direct surface water flow away from sloped areas to reduce soil erosion. The slope drains, typically fabricated from corrugated metal or plastic piping, are installed perpendicular to slope contours. The slope drains are either placed on the surface of slopes or buried underneath the sloped surface. The outlets of the slope drains exit at drainage swales or stormwater inlets.

Groundwater Reaching Surface. These releases are from local springs, creeks, and horizontal wells (hydraugers). To minimize erosion, riprap, gravel bag berms, or other means of reducing flow have been installed to slow the flow of uncontaminated groundwater toward the stormwater drain inlets. Where pollutants are present in the groundwater, comingling of groundwater with stormwater is accomplished by various methods including the use of drain inlet covers, treatment BMPs, plumbing to groundwater treatment systems, and secondary containment. Specifically, at the B51 Fire Trail groundwater treatment system, contaminated groundwater from hydraugers is treated by liquid-phase GAC before being discharged to the sanitary sewer in accordance with an EBMUD permit for discharge of treated groundwater to the sanitary sewer.

Riprap rock barriers designed to intercept and slow the flow of runoff are installed at the site. The rock has been installed on the side of eroded slopes or as a linear feature along the toe of slopes with potential or actual soil erosion.

Erosion Control Mats (ECMs), consisting of biodegradable materials only, such as jute, curled wood fibers, straw, coconut fibers, or a combination of these materials, are installed at the site. Materials used to make the ECMs should be completely biodegradable; ECMs must not include any synthetic component because of this material's potential adverse impact on the Alameda whipsnake (the U.S. Fish and Wildlife Service has designated certain areas of Berkeley Lab as habitat for this snake species). Those ECMs are designed to be used in combination with vegetation and provide shorter term protection of slopes (i.e., less than 1 year). Seed is typically placed beneath the ECMs.

Fiber Rolls (straw wattles) consist of straw fibers that are rolled or bound into a tight tubular roll and wrapped in burlap fabric only (synthetically wrapped or plastic-wrapped fiber rolls must never be used anywhere on site for the same reason that ECMs containing synthetic material are prohibited – namely, the potential adverse impact on the Alameda whipsnake).

Fiber rolls are typically placed perpendicular to the slope to intercept runoff. At the site, fiber rolls are placed along the toe, top, and face, and at grade breaks of selected exposed and erodible slopes to shorten slope length and diffuse runoff into sheet flow and hence reduce velocity and associated erosion.

Silt Fences are installed on selected slopes at the site to provide a linear sediment barrier of permeable fabric to intercept and slow the flow of stormwater runoff and hence reduce the potential for erosion. The silt fences are located downslope of exposed soil areas.

The controlled version of this document is located on the Environment, Health, and Safety Division's PowerDMS webpage.
Printed or electronically transmitted copies are not official. Users are responsible for working with the latest approved revision.

Silt-Sifter Inlet Protection. High-density polyethylene fabric containing either sand, rock, or tightly rolled Aspen wood has been placed at selected drop inlets located adjacent to areas of potential soil erosion or industrial activities generating particulates.

Filter Fabric Inlet Protection. Filter fabric inserts have been placed inside selected storm drain drop inlets and secured by the inlet grates. The non-woven filter fabric inlet protection has been located adjacent to areas of potential soil erosion or industrial activities generating particulates.

Asphalt Curbs have been constructed around selected slopes near drain inlets to prevent soil erosion and mobilization of suspended solids in stormwater runoff.

Sweeping and Vacuuming using a targeted approach is implemented at the site to reduce sediment run-on from undeveloped areas onto roads. Sweeping of debris into storm drains is not permitted.

Outlet Protection devices consisting of riprap, grouted riprap, or concrete apron are installed at selected slope drain outlets to reduce scour and control the velocity of stormwater flow. Outlet protection is installed at hydrauger and surface drain outlets that do not discharge directly into a storm drain, or onto an impermeable surface.

Check Dams to reduce scour and channel erosion are installed where reduced stormwater velocity is desired. The check dams are constructed of rock or asphalt and placed across drainage ditches or drainage swales as needed.

4.1.9 Inspections

In accordance with the General Permit, Berkeley Lab conducts monthly and annual facility inspections, as well as ad hoc inspections, to certify that the BMPs and LBNL policies incorporated in this Plan and in LBNL operating procedures are in use and effective. All stormwater monitoring information, including records, data, reports, and inspection forms are retained as paper or electronic files for a minimum of 5 years and are available for review during Berkeley Lab's normal business hours.

The LBNL site is patrolled every shift by technicians from the Facilities Division. Their primary aim is to ensure that facilities and equipment are working properly. Any unusual occurrence is noted and reported for appropriate response. During storm events, special attention is given to storm damage and to maintaining drainage.

Walkthrough inspections may be made by supervisors at any time to ensure that facilities are in good order and ready for service during storms. These inspections may also address other matters requiring compliance with BMPs or LBNL policies.

Inspections requirements of the SMIP identify conditions that could result in pollution of stormwater (monthly observations of any non-stormwater discharges) and any actual conditions where stormwater is being impacted, such as presence of floating or suspended materials, O&G, discolorations, turbidity, and odor (monthly observations during wet season). Stormwater inspections are conducted and documented by ESG personnel.

The controlled version of this document is located on the Environment, Health, and Safety Division's PowerDMS webpage.
Printed or electronically transmitted copies are not official. Users are responsible for working with the latest approved revision.

4.1.10 Construction- and Maintenance-Specific BMPs

Berkeley Lab seeks to institute BMPs to avoid impact to the storm drain system during construction, demolition, or maintenance activities (referred to as construction activities below). Six major categories of stormwater BMPs are considered and, if appropriate, implemented for every LBNL construction, demolition, and maintenance project at Berkeley Lab, as follows:

1. Erosion Control
2. Sediment Control
3. Tracking Control
4. Wind Erosion Control
5. Non-stormwater Control
6. Waste Management and Pollution Control

Specific narrative descriptions of BMPs to be used are listed by category in each of the following sections. Copies of the fact sheets of all the BMPs selected for the relevant project are as required by the California Stormwater Quality Association's (CASQA) BMP handbook and online portal for construction and are included in Appendix K.

4.1.10.1 Erosion Control

Erosion control, also referred to as soil stabilization, consists of source control measures that are designed to prevent soil particles from detaching and becoming transported in stormwater runoff. Erosion control BMPs protect the soil surface by covering and/or binding soil particles. Construction activities will incorporate erosion control measures that are effective and result in the reduction or elimination of sediment-related pollutants in stormwater discharges and authorized non-stormwater discharges from construction activity to the Best Available Technology/Best Control Technology (BAT/BCT) standard as required by the contract documents. All construction projects will implement the following practices for effective temporary and final erosion control during construction activities:

- Preserve existing vegetation where required and when feasible.
- Apply temporary erosion control to remaining active and non-active areas as required by the CASQA BMP Handbook, Construction section, and the contract documents. Reapply as necessary to maintain effectiveness.
- Implement temporary erosion control measures at regular intervals to achieve and maintain the subcontractors' disturbed soil area requirements.
- Stabilize non-active areas as soon as feasible after the cessation of construction activity.
- Control erosion in concentrated flow paths by applying erosion control blankets, erosion control seeding, and lining swales as required.
- Apply seed to areas deemed substantially complete.
- At completion of construction, apply permanent erosion control to all remaining disturbed soil areas.

The controlled version of this document is located on the Environment, Health, and Safety Division's PowerDMS webpage.
Printed or electronically transmitted copies are not official. Users are responsible for working with the latest approved revision.

Sufficient erosion control materials will be maintained on site to allow implementation in conformance with applicable permit requirements. This includes implementation requirements for active areas and non-active areas that require deployment before the onset of rain.

The following BMPs should be considered for implementation to prevent erosion on all construction sites:

EC-1, Scheduling. Schedule construction activities with the incorporation of both soil stabilization and sediment control measure BMPs to reduce the discharge of pollutants to storm drain facilities or watercourses. The schedule will limit exposure of disturbed soil to wind, rain, and stormwater run-on and runoff and minimize soil-disturbing activities.

EC-2, Preservation of Existing Vegetation. Preserve existing vegetation to the largest extent possible.

EC-4, Hydroseeding. Apply hydroseeding to protect disturbed soil areas from soil erosion. The hydroseeding materials will be applied after grading operations. The application of hydroseeding materials will be performed in accordance with manufacturer's specifications. The application of erodible landscape materials will be discontinued within 2 days before a forecasted rain event or during periods of precipitation. All erodible landscape materials will be covered when not being used.

EC-7, Geotextile and Mats. Place erosion control matting in accordance with installation documents. ECMs must not include any synthetic netting component because of this material's potential adverse impact on the Alameda whipsnake (the US Fish and Wildlife Service has designated certain areas of Berkeley Lab as habitat for this species of snake). The ECM should be installed on all new cut-and-fill slopes of 2:1 or greater.

EC-14, Compost Blankets. Apply compost blankets to protect disturbed soil areas from soil erosion; this can be used as an alternative to hydroseeding, as mentioned above. See also Section 4.1.8 for specific information on measures used throughout the site to control erosion.

4.1.10.2 Sediment Control

Sediment controls are structural measures that are intended to complement and enhance the selected erosion control measures and reduce sediment discharges from active construction areas. Sediment controls are designed to intercept and settle out soil particles that have been detached and transported by the force of water. Any construction project will incorporate sediment control measures that are effective and result in the reduction or elimination of sediment-related pollutants in stormwater discharges and authorized non-stormwater discharges from construction activity to the BAT/BCT standard as required by the contract documents, and other measures selected by the Subcontractor, SWPPP Manager, or Owner.

Sufficient quantities of temporary sediment control materials will be maintained on site throughout the duration of the construction activities, to allow implementation of temporary sediment controls in the event of predicted rain, and for rapid response to failures or emergencies, in conformance with other Permit requirements and as described in this SWPPP. This includes implementation requirements for active areas and non-active areas before the onset of rain.

The controlled version of this document is located on the Environment, Health, and Safety Division's PowerDMS webpage.
Printed or electronically transmitted copies are not official. Users are responsible for working with the latest approved revision.

The following BMPs should be considered for implementation to prevent sediment migration on all construction sites:

SE-1, Silt Fence. Install silt fence in lieu of fiber rolls surrounding the entire outside perimeter of the project.

SE-5, Fiber Rolls. Place fiber rolls surrounding the entire outside perimeter of the project, as well as surrounding stockpiles. Although Appendix K's CASQA fact sheet SE-5 describes biodegradable materials wrapped by netting, synthetically wrapped or plastic-wrapped fiber rolls must never be used anywhere on site for the same reason that erosion control mats containing synthetic material are prohibited – namely, the potential adverse impact on the Alameda whipsnake.

SE-6, Gravel Bag Berm. Install gravel bag berms along the downgradient perimeter of the project sites to prevent runoff from the construction site if there is asphalt paving.

SE-7, Street Sweeping and Vacuuming. Sweep the streets throughout the project site where noticeable tracking of materials occurs onto paved roads. Street sweeping will be performed, if needed, daily from the beginning of construction activities until completion of the project.

SE-10, Storm Drain Inlet Protection. Protect all drain inlets at the project site before beginning project operations. The drain inlets will consist of filter fabric to filter out any sediment and pollutant discharge before runoff enters the storm drainage systems. All drain inlet protection will be installed in a manner that will not cause ponding or pose a threat to traffic safety. If ponding does result the source of the ponding will be identified and corrective actions taken, if necessary.

During critical construction operations where potential of non-stormwater entering the storm drain inlet exists, the inlet should be sealed off with urethane sheets or plastic covers, and once the critical construction is completed, the drain inlets should be opened again.

4.1.10.3 Tracking Control

The following BMPs have been selected to reduce sediment tracking from the construction site onto private or public roads:

TC-1, Stabilized Construction Entrance/Exit. For the majority of the projects at Berkeley Lab, loading of trucks will be done on paved surfaces and does not have the potential for track-out of mud or dirt. Regular sweeping will be done to prevent any tracking in or out of the construction site.

SE-7, Street Sweeping and Vacuuming. Perform street sweeping throughout the project site where noticeable tracking of materials occurs onto paved roads. Street sweeping will be performed, if needed, daily from the beginning of construction activities until completion of the project.

4.1.10.4 Wind Erosion Control

The following BMP should be considered to control dust from the construction site:

WE-1, Wind Erosion Control. Implement this BMP to alleviate nuisance dust and wind erosion. Use a water truck to mist moderate quantities of water on exposed soil during demolition of buildings, trenching, grading, and other soil-disturbing activities in accordance with the specifications. Drain inlets should be appropriately protected to alleviate any sediment or construction debris to enter the drain inlet (see SE-10).

The controlled version of this document is located on the Environment, Health, and Safety Division's PowerDMS webpage.
Printed or electronically transmitted copies are not official. Users are responsible for working with the latest approved revision.

4.1.10.5 Non-Stormwater Control

An inventory of construction activities and potential non-stormwater discharges should be completed before construction begins. The following BMPs should be considered for controlling non-stormwater pollution on the construction site:

NS-1, Water Conservation Practices. Implement water conservation practices when water is used on the project site. Ensure that any leakage is repaired promptly and that all water equipment is kept in good working condition. The disposal of any rinse or wash waters or materials on impervious site surfaces or into the storm drain system is prohibited. Refer to the Facilities Division's procedure MA.UT.PRC.345, Building Washing – Wastewater Management (Appendix H); in summary, discharge to storm drains of wastewater from washing operations is prohibited.

NS-2, Dewatering Operations. If necessary, prepare and implement a Dewatering Plan to collect and treat discharges of non-stormwater from the project site. Non-stormwater discharges include, but are not limited to, groundwater, water from cofferdams, water diversions, and waters used during construction activities that must be removed from a work area to facilitate construction. The Project Team will procure and comply with all applicable local and project-specific permits and regulations relating to dewatering operations. The Project Team will present the Dewatering Plan to Berkeley Lab's Project Manager for review at least 2 weeks prior to implementation of the plan and shall obtain the Project Manager's approval prior to commencement of dewatering-related work. The Dewatering Plan shall address, at a minimum, the following:

- Expected quantity of water to be discharged
- Pump capacity
- Holding tank and particulate filtration system specifications
- Water quality sampling locations (if required)
- Any additional erosion and sediment control BMPs required at the point of discharge
- Site map with layout of pumps, tanks, filtration, hoses, and discharge locations

NS-3, Paving and Grinding Operations. Cover drainage inlets to protect storm drainage facilities or watercourses during saw-cutting and patching operations. Residue from saw-cutting operations will be vacuumed up and disposed of appropriately.

NS-6, Illicit Connection/Illegal Discharge Detection and Reporting. Report any instances of illicit connections or illegal discharges immediately to the owner. Employees and subcontractors will be fully informed of the requirements of NS-6, which describes how to recognize and report illicit connections or illegally dumped or discharged materials on a construction site.

NS-8, Vehicle and Equipment Cleaning. Vehicles and equipment will be cleaned before being removed from the site. Vehicle and equipment cleaning pertains only to dry cleaning such as with rags and brooms. Employees and subcontractors can clean the equipment with steam or water only if the equipment has been moved to an appropriate off-site location.

The controlled version of this document is located on the Environment, Health, and Safety Division's PowerDMS webpage.
Printed or electronically transmitted copies are not official. Users are responsible for working with the latest approved revision.

NS-9, Vehicle and Equipment Fueling. Use a fuel truck to perform vehicle and equipment fueling within the designated area, which will be level ground and 50 feet away from the closest drain inlet. During all vehicle and equipment fueling, spill kits will be used to capture any potential spills.

NS-10, Vehicle and Equipment Maintenance. This pertains to light lubrication and greasing of equipment on site. Again, this will be performed within the designated area. Spill prevention measures will be put in place to prevent the discharge of vehicle and equipment fluids.

NS-12, Concrete Curing. Portland cement concrete (PCC) and curing chemicals should be placed where they are removed from exposure to rainfall and runoff from other areas to prevent PCC from leaving the site.

NS-13, Concrete Finishing. This BMP pertains to any concrete finishing operation. The water from concrete finishing operations should be collected and disposed of appropriately. Protect all drain inlets during those operations.

4.1.10.6 Waste Management and Materials Pollution Control

An inventory of construction activities, materials, and wastes should be completed before construction activities begin. The following BMPs should be considered to handle materials and control construction site wastes on the construction site:

WM-1, Material Delivery and Storage. A watertight non-flammable cabinet should be used to store gas cans and other flammable materials. Construction materials will be brought on site when needed to complete construction operations. All employees involved will be educated on the proper material delivery and storage practices.

WM-2, Material Use. Prevent misuse and overuse of materials. Proper amounts of materials will be prepared for each work shift to avoid generating excess. Safety Data Sheets (SDSs), material inventory, and emergency contacts will be maintained in the on-site office trailer or available with the foreman or superintendent. Spill kits will be kept on site for immediate use.

WM-3, Stockpile Management. Stockpile demolished materials and excavated materials at the designated areas within the construction site. Linear barriers (gravel bags and/or fiber rolls) and plastic covers (with ultraviolet [UV]-resistant plastics) will be placed under, over, and around stockpiles as containment measures. Stockpile covers shall be labeled with the origin of the material.

WM-4, Spill Prevention and Control. Ensure that materials are sealed and secured on level ground to prevent the possibility of a spill. Spill kits will be available on site for control in the event of a spill. In addition, all construction personnel should be trained on what a significant spill is for each material that is used, what the dangers are, and appropriate response for major and minor spills. All chemicals will be stored in watertight containers with appropriate secondary containment to prevent any spillage or leakage or will be stored in a completely enclosed storage shed.

WM-5, Solid Waste Management. Solid waste will primarily consist of demolished non-hazardous solid waste, recyclable material, and general litter. Solid waste will be loaded directly into trucks or bins for off-site disposal. All waste disposal containers will be covered (with UV-resistant plastics, if plastics were

The controlled version of this document is located on the Environment, Health, and Safety Division's PowerDMS webpage.
Printed or electronically transmitted copies are not official. Users are responsible for working with the latest approved revision.

deemed necessary) at the end of every business day and during rain events. Discharges from the waste disposal containers to the stormwater drainage system need to be prevented.

WM-6, Hazardous Waste Management. Before demolition of any diversion structure (roof or other), all known hazardous materials will be removed with appropriate controls and disposed of in accordance with the project-specific waste management plan. Hazardous waste includes asbestos-containing materials and lead.

WM-7, Contaminated Soil Management. When contaminated soils are encountered, the soils will be contained, or placed on UV-resistant plastics and covered if stockpiled and left in place or disposed of in accordance with the project construction documents. For the project sites identified with potential contaminants, a soil management plan should be developed. In addition, employees will be instructed to recognize evidence of contaminated soils, such as buried debris, discolored soil, and unusual soils.

WM-8, Concrete Waste Management. Construct a below- or above-grade concrete washout facility and maintain when concrete is poured. The washout will be constructed to be large enough to contain more than sufficient volume of concrete washout waste.

WM-9, Sanitary/Septic Waste Management. Maintain portable toilets and wash stations for on-site use during the project. The portable toilets and wash stations will be located within the construction yard. The toilets and wash stations will be equipped with secondary containment pans, located on level ground, away from the concentrated flow of traffic, and a minimum of 50 feet away from drainage facilities and watercourses. Weekly maintenance will be provided by a licensed sanitary/sewer waste hauler, and waste will be disposed of off-site.

WM-10, Liquid Waste Management. Collect and appropriately dispose of liquid waste during the project. Disposal of any rinse or wash waters or materials on impervious or pervious site surfaces or into the storm drain system is prohibited.

During testing of fire hydrants and risers, or during an incident in which a sewage or water supply pipe has broken, Facilities Division personnel carry dechlorination tablets and use them to the extent possible to prevent water with chloramine from being discharged to the storm sewer system. A specific procedure, MA.UT.PRC.344 (Appendix F), addresses the use of dechlorination tablets.

Specific preventive practices are used when washing a building, removing old paint, or scraping before repainting. Wash water needs to be collected, filtered, and possibly tested before disposal, preferably to sanitary sewer drains. A specific procedure, MA.MG.PRC.345 (Appendix H), addresses this activity.

4.1.10.7 Construction Specifications

All construction projects on the site are conducted in general accordance with the Master Specifications maintained by the Facilities Division. Regarding stormwater protection, specification (013529) includes required BMPs for construction projects with specific orientation regarding protection of all storm drains and appropriate spill measures. Additionally, project-specific construction specifications must include stormwater BMPs required for the project. Contractors are required to adhere to LBNL stormwater construction specifications, and to show evidence of a construction stormwater pollution prevention plan for projects

The controlled version of this document is located on the Environment, Health, and Safety Division's PowerDMS webpage.
Printed or electronically transmitted copies are not official. Users are responsible for working with the latest approved revision.

larger than one acre, in accordance with the requirements of the Construction General Permit (see also Section 5).

4.1.10.8 Post-Construction Controls

Post-construction stormwater management will be incorporated into plans for new development and redevelopment. The General Construction General permit (permit) includes post-construction standards with the requirement for construction sites greater than one acre to match pre-project hydrology to ensure that the physical and biological integrity of aquatic ecosystems is maintained. This "runoff reduction" approach is analogous in principle to low-impact development and will serve to protect related watersheds and water bodies from both hydrologic-based and pollution impacts associated with the post-construction landscape. The program will, to the extent possible, incorporate into the design of projects' long-term BMPs that prevent or minimize water quality impacts and seek not to increase the volume of water discharged. These BMPs may be structural or nonstructural, and will be implemented through use of written policies and specifications such as proposed site design guidelines.

The strategies will reflect site conditions, receiving waters, and amount of anticipated construction (see also Section 5).

Post-Construction Standard requirements under the Construction General permit (permit) became effective on September 1, 2023. In summary, those requirements state that Berkeley Lab must use nonstructural controls unless demonstrated that nonstructural controls are infeasible or that structural controls will produce greater reduction in water quality impacts.

In addition, Berkeley Lab must, through the use of minimum (nonstructural) and advanced (structural) measures, replicate the pre-project water balance (defined as the volume of rainfall that ends up as runoff) for the smallest storms up to the 85th percentile storm event (or the smallest storm event that generates runoff, whichever is larger). Berkeley Lab will need to inform the San Francisco Bay RWQCB staff at least 30 days before the use of any structural control measure used to comply with these post-construction requirements. Volumes that cannot be addressed using nonstructural practices must be captured in structural practices and approved by the San Francisco Bay RWQCB. When seeking Regional Board approval for the use of structural practices, dischargers must document the infeasibility of using nonstructural practices on the project site, or document that there will be fewer water quality impacts through the use of structural practices.

For construction sites at Berkeley Lab whose total disturbed area exceeds two acres, the discharger must preserve the pre-construction drainage density (miles of stream length per square mile of drainage area) for all drainage areas within the area serving a first-order stream (a first-order stream is defined as a stream with no tributaries) or larger stream and ensure that post-project time of runoff concentration is equal to or greater than pre-project time of concentration.

4.2 ADVANCED BMPS

Advanced or structural BMPs are physical measures implemented at a facility to manage pollutants to eliminate or significantly reduce the potential for contact between the pollutant and stormwater.

The controlled version of this document is located on the Environment, Health, and Safety Division's PowerDMS webpage.
Printed or electronically transmitted copies are not official. Users are responsible for working with the latest approved revision.

Examples of general structural BMPs include indoor storage of chemicals when possible, containment systems for leak and spill control, elimination of unpermitted connections to storm drains, maintenance of storm drains and streets to remove organic material and dirt so as to reduce sedimentation and the presence of oxygen-demanding materials in the stormwater stream, and prevention of sedimentation and erosion from unpaved areas and construction sites.

4.2.1 Secondary Containment Structures

Containers. Smaller quantities of chemicals in containers at WAAs and DSAs are not routinely stored on the exterior of buildings unless protected by secondary containment units or within locked chemical storage cabinets. Most WAAs and DSAs are located indoors or are locked containers with secondary containment. Bulk storage areas have been redesigned to reduce the possibility for leakage, and have been sheltered so that they will not affect stormwater discharges. The HWHF stores all materials either inside or in sheltered and covered areas. See Section 4.1.6 for further information on hazardous waste management.

Aboveground and Underground Tanks for Bulk Storage of Liquids. Bulk aboveground liquid storage tanks (greater than 42 gallons, for oil) and hazardous waste treatment tanks are equipped with secondary containment systems. Containment volume of secondary containment is sufficient to contain the entire contents of the largest single container plus sufficient freeboard to allow for precipitation from a 25-year, 24-hour storm event. Underground storage tanks are equipped with leak detection and monitoring equipment per current regulations.

In addition, Berkeley Lab maintains an SPCC Plan to identify potential releases and mitigation measures. All facility containment modifications had been implemented by the end of fiscal year 1995. To the extent possible, oil-filled transformers are gradually being replaced by dry-type transformers.

Outdoor Equipment. Aboveground storage tanks, some cooling towers, and electrical equipment located outside are equipped with secondary containment. These containment structures are equipped with basins with locked drain valves. Per section 2 of the Facilities Division Procedure MA.MG.PRC.056, *Rainwater Disposal*, ESG notifies the Facilities PMTs Supervisor after either an individual or consecutive rain events that produce 3 inches or more of total rainfall. After the precipitation event, the PMTs check for accumulation of stormwater in these basins, where water is checked for the presence of oil or an oily sheen on the water surface. If evident, the water is collected in a drum or vessel for disposal. If requested, EHS staff collects samples of accumulated rainwater and advises on proper disposal methods. If there is no evidence of oil or sheen on the water, it is released to the storm drain system.

Facilities Division procedure MA.MG.PRC.056, *Rainwater Disposal*, codifies the above actions (see Appendix L). Another procedure maintained by WMG (EHS Procedure 870, Appendix J) applies to the discharge of stormwater through the storm drains in the yard at the HWHF.

Most piping used to transfer hazardous wastes is double contained. The only exception is piping to the treatment units at Buildings 2 and 70A, which, as Conditionally Authorized units under the state's Tiered Permitting system, are exempt from the requirement for double-contained piping.

Equipment is routinely inspected for condition, and maintenance is conducted to ensure that leaks and damage that could result in releases are minimized.

The controlled version of this document is located on the Environment, Health, and Safety Division's PowerDMS webpage.
Printed or electronically transmitted copies are not official. Users are responsible for working with the latest approved revision.

4.2.2 Treatment BMPs

Treatment controls include measures to treat collected stormwater before discharge, such as oil–water separators, drain inserts equipped with passive filtration socks or treatment cartridges, and compost filter socks with ionic adsorbent additives for heavy metal capture.

The stationary oil–water separator at the fuel pumps at Building 76 (Figure 4-1) is designed to passively separate fuel and oil from water in stormwater run-on to the area, and to act as a first line of defense in case of any spills. This passive oil–water separator is located directly between the unleaded and the E85 fuel pumps.

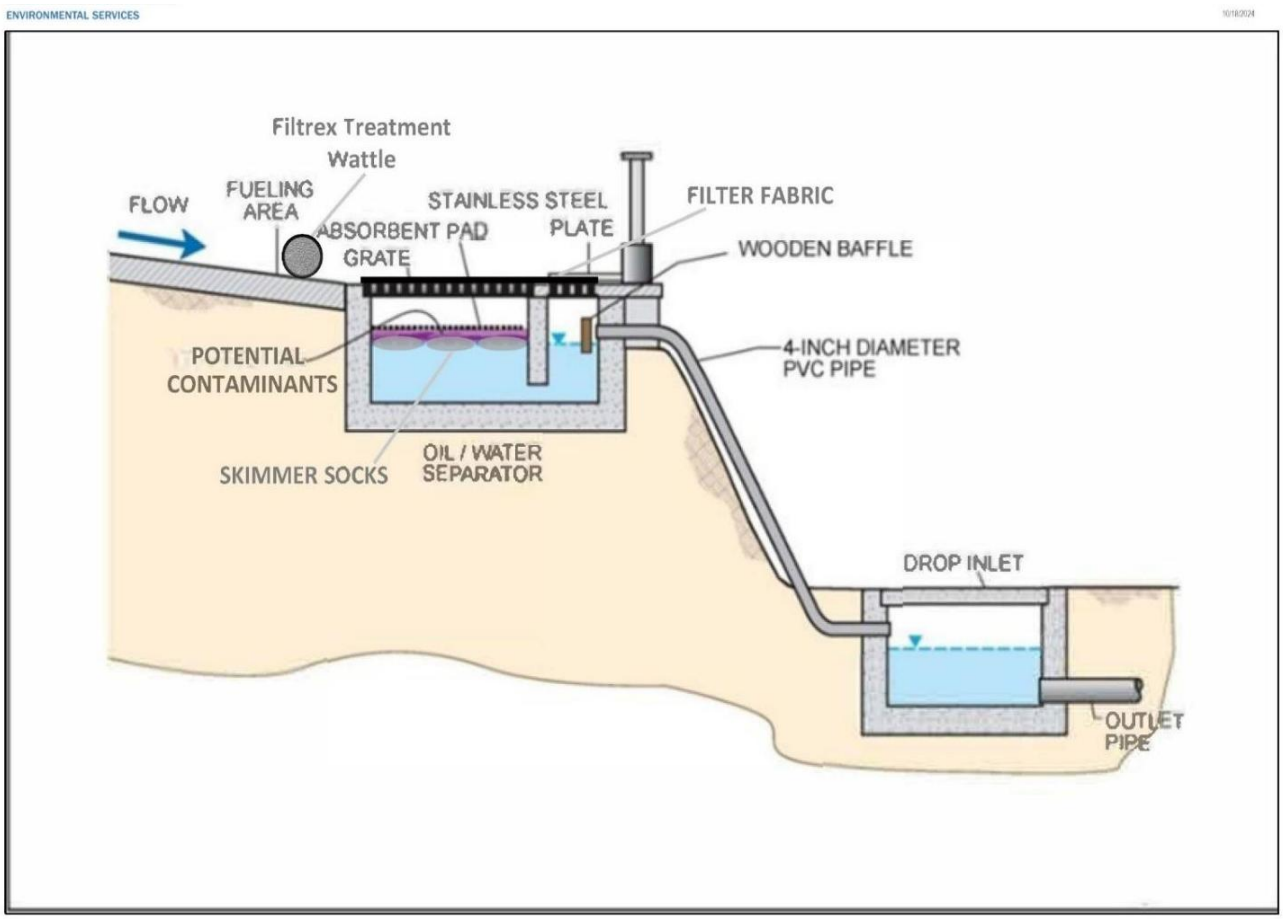

Figure 4-1. Building 76 Fueling Area Oil-Water Separator Schematic

The controlled version of this document is located on the Environment, Health, and Safety Division's PowerDMS webpage.
Printed or electronically transmitted copies are not official. Users are responsible for working with the latest approved revision.

A compost filter sock is located at stormwater monitoring point MP-2 to reduce suspended sediment in stormwater runoff from entering the storm drain conveyance system (Figure 4-2).



Figure 4-2. Compost filter sock and drain inlet filter fabric at stormwater monitoring point MP-2.

At the B51 Fire Trail groundwater treatment system, contaminated groundwater from hydraugers is treated by liquid-phase GAC before being discharged to the sanitary sewer in accordance with an EBMUD permit for discharge of treated groundwater to the sanitary sewer.

4.3 INDUSTRIAL ACTIVITY-SPECIFIC ADVANCED BMPS

Berkeley Lab implements BMPs for specific activities involving potential pollutants at the site to minimize the potential for these substances to enter the stormwater system. This section describes BMPs that have been implemented in connection with those specific industrial activities.

The following specific BMPs have been implemented at the **Building 76 Fueling (MP-2)** area:

- The fueling station for diesel and unleaded gasoline, and E85 (85% ethanol, 15% unleaded gasoline), is located outside on a concrete pad in an asphalt-paved area at Building 76. Special training on storm drain protection has been provided to truck drivers, fleet vehicle operators, and others who use the fueling station.
- An oil–water separator designed to passively separate fuel and oil from water in stormwater run-on to the area, and to act as a first line of defense in case of any spills, was installed in 1998 next to the fuel pumps (i.e., between the unleaded and E85 pumps at Building 76). Oil-absorbent pads are installed in both compartments to effectively capture the fuel, oil, and grease. The passive oil–water separator is inspected weekly and maintained regularly during the wet season; the oil-absorbent pads are replaced as needed and disposed of appropriately (described in Facilities Division procedure MA.UT.PRC.328; see

The controlled version of this document is located on the Environment, Health, and Safety Division's PowerDMS webpage.
Printed or electronically transmitted copies are not official. Users are responsible for working with the latest approved revision.

Appendix I). In addition, a solid metal plate was installed above the secondary compartment to minimize organic and other debris from falling into the oil–water separator.

- The oil–water separator is inspected on a weekly basis.
- Absorbent pads in the oil–water separator are replaced on a monthly basis or more frequently if significant contamination is seen on the pad during the weekly inspection.
- Provisions of the LBNL SPCC Plan apply with respect to fuel spillage.
- Passive filtration treatment wattles specifically designed for heavy metals and hydrocarbon capture have been installed around the perimeter of the oil–water separator drain inlet.
- The oil–water separator vault is emptied and pressure-washed on an annual basis and evaluated for any necessary maintenance.

Building 85 HWHF. Hazardous waste generated at Berkeley Lab is transferred to the HWHF for consolidation, packaging, and storage, pending off-site disposal. Berkeley Lab's hazardous waste management program specifies procedures for the handling and containment of hazardous wastes at the HWHF, which includes an upper and lower yard. Each yard is used exclusively for loading and unloading of waste materials, with all waste handling, processing, consolidation, and storage occurring inside the enclosed Building 85 HWHF. Both yards consist of concrete surfaces that have been coated to resist strong acids and bases. In addition, each yard contains a sump with two valves – an upper valve and a lower valve – that control the release of stormwater to the stormwater drains. As a normal operating procedure, the lower valve is closed and the upper valve is open. With the lower valves closed, the sumps have the capacity to accumulate several hundred gallons of liquids. This design enables containment of accidental liquid releases before these liquids would be discharged to the storm drain system.

The following specific BMPs have been implemented at the **Lower Yard (MP-4)**:

- The yard is inspected daily and swept or cleared with a leaf-blower, as needed, to remove accumulated solid debris.
- The concrete surface of the yard is surrounded by a 4-inch-high concrete curb to eliminate stormwater run-on (access ramps are graded to prevent stormwater run-on).

The following specific BMPs have been implemented at the **Upper Yard (MP-5)**:

- The yard is inspected daily and swept or cleared with a leaf-blower, as needed, to remove accumulated solid debris.
- Fiber rolls (straw wattles) are placed in selected areas to minimize sediment-laden run-on onto the concrete surface along the western side of the Upper Yard.
- The concrete surface of the yard is surrounded by a 4-inch-high concrete curb to eliminate stormwater run-on (access ramps are graded to prevent stormwater run-on).
- The crib wall on the northwestern side of the yard will be cleaned to remove loose soils and vegetation that are blown off or dislodged from the wall and fall into the yard. Clearing this debris from the crib wall will reduce the amount of sediment accumulating in the yard.

The controlled version of this document is located on the Environment, Health, and Safety Division's PowerDMS webpage.
Printed or electronically transmitted copies are not official. Users are responsible for working with the latest approved revision.

5 Six Minimum Measures

Berkeley Lab has adopted six minimum measures to successfully implement and maintain stormwater BMPs and comply with requirements of the General Permit, as follows:

1. Public Education
2. Public Participation – Involvement
3. Illicit Discharge Detection and Elimination
4. Construction Site Runoff Control
5. Post-Construction Runoff Control
6. Pollution Prevention/Good Housekeeping

"Public," for the purposes of this Plan, is understood to include staff, guests, and employees (not members of the general public). The following sections provide some discussion of the ways that Berkeley Lab addresses and has incorporated, or plans to incorporate, the six measures into its stormwater program.

5.1 PUBLIC EDUCATION AND OUTREACH

- Develop training materials and provide training for employees, and their supervisors, whose job functions include the use or disposal of possible stormwater contaminants.
- Label storm drain inlets.
- Submit articles for publication in "Elements" (the daily online LBNL newsletter) and other media as appropriate to raise awareness of the stormwater program.
- Upon receiving complaints or reports of release of inappropriate materials to storm drains, contact the individuals or organizations responsible and explain regulations and proper behavior or disposal methods.
- Provide educational materials on stormwater at Berkeley Lab Earth Day events.
- In cooperation with UC Berkeley, publicize the Strawberry Creek website and community creek cleanups on campus.

5.2 PUBLIC PARTICIPATION/INVOLVEMENT

- Prepare stormwater protection and awareness articles for Elements.
- Publish the SWPPP on the ESG website.
- Publicize the name, phone number, and email address of the ESG Stormwater Program Leader for reporting of stormwater pollution.
- Provide planning, design, construction, and operations recommendations to management and staff to improve quality and minimize quantity of stormwater runoff.

The controlled version of this document is located on the Environment, Health, and Safety Division's PowerDMS webpage.
Printed or electronically transmitted copies are not official. Users are responsible for working with the latest approved revision.

- Provide review services for project planning documents.
- Provide oversight and assistance to construction projects, especially those larger than one acre that require a separate construction permit, to ensure that they comply with regulations and prevent stormwater pollution.

5.3 ILLICIT DISCHARGE DETECTION AND ELIMINATION

- Develop and maintain a map of Berkeley Lab's storm drainage system, showing outfall locations and the waters of the United States that receive discharge from it.
- Develop a system of identification for the pipes and catch basins/inlets of the storm drainage system similar to that of the sanitary sewer system.
- Ensure that LBNL specifications and contracts prohibit design of any unauthorized non-stormwater discharges to the storm drainage system.
- Educate the LBNL community to prevent illegal discharges and improper disposal of waste using measures as detailed in Sections 5.1 and 5.2, Public Education and Outreach and Public Participation/Involvement, respectively.
- Encourage LBNL employees to be aware of dry weather flows into the storm drainage system and to report suspected unauthorized discharges.

5.4 CONSTRUCTION SITE RUNOFF CONTROL

- Review, and revise as necessary, procedures for craftspeople, laborers, and others who work outside to protect the storm drains. For example, Facilities Procedure MA.UT.PRC.345 addresses measures to be taken for wastewater management when washing buildings. Facilities Procedure MA.UT.PRC.344 presents methods for using dechlorination tablets to neutralize chloramine in domestic water before it is discharged to the storm drainage system.
- Forward email storm advisories to appropriate personnel (project management, inspection, construction, and maintenance staff) to advise them of impending storms and enable them to prepare their sites and institute stormwater pollution prevention controls.
- Review, and revise as necessary, construction specifications requiring the implementation of proper erosion and sediment controls, and appropriate BMPs, for all construction sites, to prevent the discharge of contaminants to storm drains. Ensure that this specification is inserted into appropriate contracts and that contractors and subcontractors are trained on requirements. A section addressing construction stormwater management can currently be found in the Master Specification that contains general EHS requirements, Div. 1, 01020.
- Review, and revise as necessary, Facilities Division procedures or memoranda of understanding that require EHS review of construction plans to consider potential water quality impacts.

The controlled version of this document is located on the Environment, Health, and Safety Division's PowerDMS webpage.
Printed or electronically transmitted copies are not official. Users are responsible for working with the latest approved revision.

- Review, and revise as necessary, Facilities Division procedures for site inspection and enforcement of control measures to prevent the discharge of contaminants to storm drains.
- Train project managers and site inspectors on appropriate BMPs for construction sites (primarily using the *California Stormwater Best Management Practice Handbook* section on construction published by CASQA).

5.5 POST-CONSTRUCTION RUNOFF CONTROL

- A third-party review of the SWPPP was commissioned by the Facilities Division in 2005 with a view toward ensuring completeness of the SWPPP and compliance with permit regulations. Further review and evaluation have been undertaken to identify post-construction control measures that are appropriate for the steep LBNL site; erosion control is discussed in Section 4.1.8.
- Develop standard specifications for appropriate post-construction structural and nonstructural BMPs and ensure their incorporation into contracts.
- Develop LBNL design guidelines and incorporate appropriate structural and nonstructural design strategies into them.
- Berkeley Lab's policy of not building in or near any creeks has been formalized in the 2006 Long Range Development Plan.
- (For stormwater program personnel) Provide assistance to project planners, managers, and architects in identifying and selecting appropriate post-construction controls. Evaluate each project on its own merits to choose appropriate post-construction controls.
- Project review (see Public Participation/Involvement) will ensure that BMPs are incorporated into design.
- Develop and implement policies and procedures to ensure long-term operation and maintenance of relevant controls.

5.6 POLLUTION PREVENTION / GOOD HOUSEKEEPING

- Implement and actively support the site Environmental Management System, which considers and promotes various projects and activities to encourage pollution prevention, waste reduction, and sustainable practices.
- Develop and implement an operations and maintenance inspection program to prevent/reduce runoff from operations to storm drains.
- Train employees on stormwater management and water quality issues, in particular those employees involved in fleet and building maintenance, construction, design, grounds maintenance, custodians, cafeteria workers, and the Fire Department.
- Assist operations and maintenance personnel in defining appropriate maintenance activities, schedules, and inspection procedures.
- Promote proper waste disposal and use of site waste collection and transport methods.

The controlled version of this document is located on the Environment, Health, and Safety Division's PowerDMS webpage.
Printed or electronically transmitted copies are not official. Users are responsible for working with the latest approved revision.

- Actively publicize prohibition on disposal of hazardous materials to dumpsters and policy of keeping dumpsters closed and/or sheltered. Work with buildings/divisions to find covered space for dumpsters and hoppers to the extent possible. Facilitate the phasing out of old hoppers and the purchase of new, waterproof hoppers with covers.
- Emphasize housekeeping and proper practices in such areas as spill control, vehicle washing, fueling, vehicle maintenance, and catch basin cleaning. Ensure that site cleaning is done by sweeping, not hosing down, areas. Train landscape and grounds management personnel to minimize use of pesticides and use of water for irrigation purposes. Encourage implementation of Integrated Pest Management methods.
- Train appropriate personnel to minimize use of domestic drinking water that needs to be discharged to storm drains, and to implement procedures for use of dechlorination tablets when necessary for such activities as hydrant flushing, emergency eyewash/shower testing, and firefighting training activities.

The controlled version of this document is located on the Environment, Health, and Safety Division's PowerDMS webpage.
Printed or electronically transmitted copies are not official. Users are responsible for working with the latest approved revision.

6 General Requirements

As required under Section 308(b) of the CWA, this SWPPP is available to the public via the SMARTS public portal. Berkeley Lab will make this document available to the San Francisco Bay RWQCB and the City of Berkeley, if requested, to determine compliance with the General Permit, and will also make available any records that are required by the General Permit. This SWPPP will be amended as appropriate, in accordance with guidelines given in the General Permit.

The controlled version of this document is located on the Environment, Health, and Safety Division's PowerDMS webpage.
Printed or electronically transmitted copies are not official. Users are responsible for working with the latest approved revision.

7 References

7.1 GENERAL OPERATIONAL GUIDANCE

California Regional Water Quality Control Board, *Water Quality Control Plan* (Basin Plan), San Francisco Bay Region (November 2019).

Lawrence Berkeley National Laboratory, *Environment, Safety & Health Manual*, PUB-3000.

Lawrence Berkeley National Laboratory, *Requirements and Policies Manual*, LBNL/PUB-201.

7.2 SPECIFIC OPERATIONAL GUIDANCE AND DATA

California Stormwater Quality Association, *Storm Water Best Management Practice Handbook/Portal*; Construction.

Department of Toxic Substances Control, *Hazardous Waste Facility Permit*, Part B,
EPA ID No. CA 4890008986.

Kuntz, G.T., *Storm Drainage Study of Eastern Portion of the Strawberry Creek Watershed at University of California*, Consulting Engineer (October 2004).

Lawrence Berkeley National Laboratory, *Chemical Hygiene and Safety Plan*, LBNL PUB-5341.

Lawrence Berkeley National Laboratory, *Waste Management Program Manual*. Lawrence Berkeley National Laboratory, *Hazardous Materials Business Plan*.

Lawrence Berkeley National Laboratory, Master Specifications for Construction Projects, LBNL Facilities Division.

Lawrence Berkeley National Laboratory, *Packaging and Transportation Safety Manual*, LBNL Facilities Division.

Lawrence Berkeley National Laboratory, *Site Environmental Report*.

Lawrence Berkeley National Laboratory, *Spill Prevention, Control, and Countermeasure (SPCC) Plan*.

Lawrence Berkeley National Laboratory, Environmental Services Group, *Spill Response Sample Collection*, ESG Procedure 260.

Lawrence Berkeley National Laboratory, Environmental Services Group, *Stormwater Monitoring and Creek (VOC) Monitoring* , ESG Procedure 263.

State Water Resources Control Board, Water Quality Order No. 2014-0057-DWQ, National Pollutant Discharge Elimination System (NPDES) General Permit for Storm Water Discharges Associated with Industrial Activities, Order No. CAS000001 (as amended by Orders 2015-0122-DWQ and 2018-0028-DWQ).

The controlled version of this document is located on the Environment, Health, and Safety Division's PowerDMS webpage.
Printed or electronically transmitted copies are not official. Users are responsible for working with the latest approved revision.

Appendix A
Permit Registration Documents

Permit Registration Documents included in Appendix A.

Yes/No	Permit Registration Document
Yes	Notice of Intent
Yes	Certification
Yes	Copy of Annual Fee Receipt
Yes	Site Map

State Water Resources Control Board

NOTICE OF INTENT

GENERAL PERMIT TO DISCHARGE STORM WATER
ASSOCIATED WITH INDUSTRIAL ACTIVITY (WQ ORDER No. 2014-0057-DWQ)
(Excluding Construction Activities)

GAVIN NEWSOM
GOVERNOR

YANA GARCIA
SECRETARY FOR
ENVIRONMENTAL PROTECTION

WDID: 2 01I002421 Status: Active

Operator Information

Type: Private Business

Name: Lawrence Berkeley National Laboratory
Address: One Cyclotron Road
Address 2:
City/State/Zip: Berkeley CA 94720
Federal Tax ID:

Contact Name: Paul Blodgett
Title: Interim EHS Director
Phone Number: 510-486-6218
Email Address: pmcblodgett@lbl.gov

Facility Information

Level:

Contact Name: Jim Buehler
Title: Environmental Protection Team Leader
Site Name: Lawrence Berkeley National Lab
Address: Strawberry Creek Watershed M/S 75B0101
City/State/Zip: Berkeley CA 94720
County: Alameda
Latitude: 37.8772 Longitude: -122.24785

Site Phone #: 510-486-7327
Email Address: jbuehler@lbl.gov
Site Size: 203 Acres
Industrial Area Exposed to Storm Water: 31.5 Acres
Percent of Site Impervious (Including Rooftops): %

SIC Code Information

1. 9999 Nonclassifiable Establishments
2.
3.

Additional Information

Receiving Water: San Francisco Bay
Flow: Indirectly
Storm Drain System:
Compliance Group:

RWQCB Jurisdiction: Region 2 - San Francisco Bay
Phone: 510-622-2300
Email: r2stormwater@waterboards.ca.gov

Certification

Name: Paul Blodgett
Date: July 08, 2026
Title: Interim EHS Director

October 22, 2026

Paul Blodgett
Lawrence Berkeley National Laborat
One Cyclotron Road
Berkeley, CA 94720

Facility Info: Lawrence Berkeley National Lab
Strawberry Creek Watershed M/S 75B0101
Berkeley, CA 94720
SIC Code(s): 9999

Waste Discharge Identification Number: 2 01I002421

Date Processed: April 01, 1992

RECEIPT OF YOUR NOTICE OF INTENT (NOI)

The State Water Resources Control Board (State Water Board) received and processed the NOI to comply with the terms of the General Permit for Storm Water Discharges Associated with Industrial Activity Order 2014-0057-DWQ.

Waste Discharger Identification (WDID) number 2 01I002421 is assigned to the facility referenced above.

Accordingly, you are required to comply with all applicable permit requirements.

Notice of Termination (NOT) is required to be submitted to the State Water Board should the owner or operator of the facility change or upon closure of the facility. Until an NOT is submitted you will continue and are responsible to pay the annual fee invoiced each April.

If you have any further questions, please contact your local Regional Water Board at 510-622-2300.

Please visit the storm water web page at www.waterboards.ca.gov/water_issues/programs/stormwater/industrial.shtml for storm water related information.

Sincerely,
Storm Water Program
Division of Water Quality

Water Boards Stormwater Multiple Application & Report Tracking System

Help Logout

You are logged-in as: **Brendan Mulholland**
If this account does not belong to you, please log out.

Navigate To:

Billing Information

The application is organized into different tabs. Please complete all applicable tabs before submitting the form. If you want to complete the application at a later time, please click on "Save & Exit".

WDID/App ID:	2 01I002421 - 180692	**Operator:**	Lawrence Berkeley National Laboratory	**Certified Date:**	07/08/2026
Status:	Active		One Cyclotron Road Berkeley CA 94720	**Processed Date:**	04/01/1992
Order No:	2014-0057-DWQ	**Facility:**	Lawrence Berkeley National Lab	**NOT Effective Date:**	
Permit Type:	Industrial - NOI		Strawberry Creek Watershed Berkeley CA 94720	**Previous ID:**	-

Operator Info | Facility Info | Addl. Facility Info | Billing Info | Attachments | Certification | Requirements | Reports | Inspections | Related Records | Print

Status History | Linked Users | NOTs | COIs

Billing Information Same as Operator | Same as Facility | Clear Billing Info **If different, enter below. Bill Month: April Bill Hold:**

Billing Name:	Lawrence Berkeley National Lab *	**Contact First Name:**	Jim *
Street Address:	1 Cyclotron Rd *	**Contact Last Name:**	Buehler *
Address Line 2:	M/S 75B0101	**Title:**	Environmental Protection Team Le
City:/State:/Zip:	Berkeley CA 94720 *	**Phone:**	510-486-7327 *Ext: (999-999-9999)
E-mail:	jbuehler@lbl.gov * (abc@xyz.com)		

Save & Exit | Save & Continue

Fields marked with * are mandatory fields.

SWRCB Tax ID: 68-0281986
The following are the Invoices and Payments associated with this NOI.

Invoices:

For a copy of the original invoice please email SWFees@waterboards.ca.gov or call (916) 341-5247

Invoice No	Invoice Date	Fiscal Year	Invoice Amount	Original Invoice Amount	Invoice Status	Status Date	Prepare Form-X
SW0339598	04/08/2026	2025	**$1,873.00**	**$1,873.00**	Done - Paid	05/12/2026	
SW0315436	04/02/2025	2024	**$1,873.00**	**$1,873.00**	Done - Paid	05/12/2025	
SW0288122	04/03/2024	2023	**$1,818.00**	**$1,818.00**	Done - Paid	05/06/2024	
SW0260721	04/05/2023	2022	**$1,738.00**	**$1,738.00**	Done - Paid	05/08/2023	
SW0234713	04/06/2022	2021	**$1,738.00**	**$1,738.00**	Done - Paid	11/01/2022	
SW0212286	04/06/2021	2020	**$1,474.00**	**$1,474.00**	Done - Paid	05/17/2021	
SW0189222	05/06/2020	2019	**$1,400.00**	**$1,400.00**	Done - Paid	10/12/2020	
SW0169463	04/09/2019	2018	**$1,400.00**	**$1,400.00**	Done - Paid	05/17/2019	
SW0149006	04/05/2018	2017	**$1,400.00**	**$1,400.00**	Done - Paid	05/14/2018	
SW0130512	04/05/2017	2016	**$1,676.00**	**$1,676.00**	Done - Paid	05/15/2017	
SW0081566	04/02/2014	2013	**$1,791.00**	**$1,791.00**	Done - Paid	04/25/2014	
SW0059566	04/03/2013	2012	**$1,359.00**	**$1,359.00**	Done - Paid	04/24/2013	
SW0047819	04/10/2012	2011	**$1,359.00**	**$1,359.00**	Done - Paid	05/03/2012	
SW0031656	04/05/2011	2010	**$1,008.00**	**$1,008.00**	Done - Paid	05/04/2011	
SW0018992	04/06/2010	2009	**$1,008.00**	**$1,008.00**	Done - Paid	05/04/2010	
SV0826861	04/13/2009	2008	**$1,008.00**	**$1,008.00**	Done - Paid	05/15/2009	
SV0726211	04/08/2008	2007	**$830.00**	**$830.00**	Done - Paid	04/29/2008	
SV0624470	04/11/2007	2006	**$830.00**	**$830.00**	Done - Paid	05/04/2007	
SV0528257	04/21/2006	2005	**$718.00**	**$718.00**	Done - Paid	05/16/2006	
SV0426224	04/07/2005	2004	**$830.00**	**$830.00**	Done - Paid	04/23/2005	
SV0316701	04/09/2004	2003	**$830.00**	**$830.00**	Done - Paid	04/29/2004	
SV0227059	04/08/2003	2002	**$700.00**	**$700.00**	Done - Paid	04/24/2003	
SV0139748	04/04/2002	2001	**$250.00**	**$250.00**	Done - Paid	04/30/2002	
SV0028530	04/06/2001	2000	**$250.00**	**$250.00**	Completed		
SV0012998		2000	**$250.00**	**$250.00**	Done - Paid	04/06/2001	
SV9912415		1999	**$250.00**	**$250.00**	Done - Paid	04/29/2000	
SV9811457		1998	**$250.00**	**$250.00**	Done - Paid	04/22/1999	
SV9710848		1997	**$250.00**	**$250.00**	Done - Paid	04/25/1998	

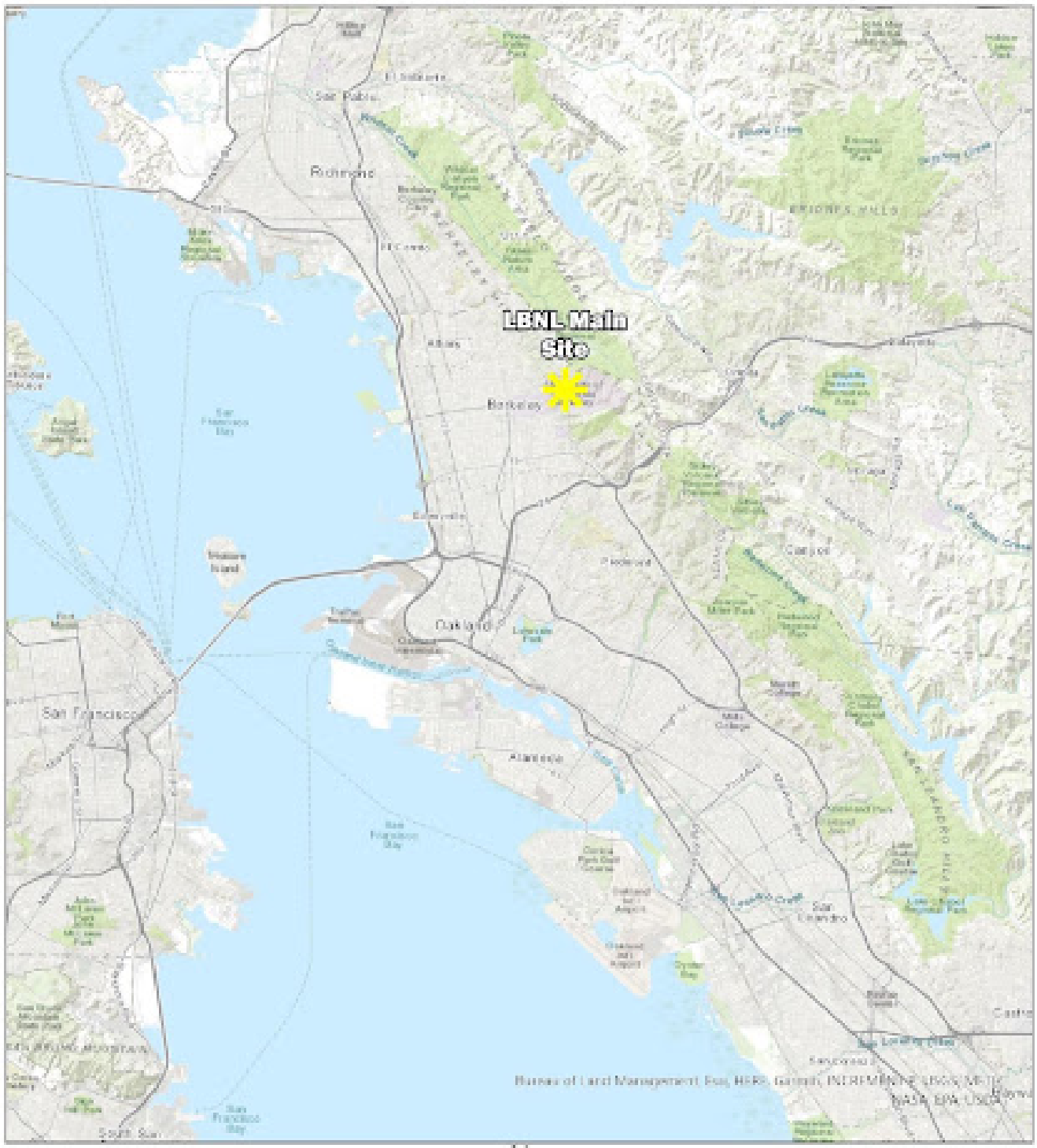

UNIVERSITY OF CALIFORNIA
LAWRENCE BERKELEY NATIONAL LABORATORY
ENVIRONMENTAL SERVICES GROUP

Appendix B
Employee Training Logs

Stormwater Management Training Log

Project Name: _____

WDID Number: _____

Stormwater Management Topic: (*check as appropriate*)

- ❑ Erosion Control
- ❑ Sediment Control
- ❑ Wind Erosion Control
- ❑ Tracking Control
- ❑ Non-Stormwater management
- ❑ Waste Management and Materials Pollution Control
- ❑ Stormwater Sampling

Specific Training Objective: _____

Location: _____ Date: _____

Instructor: _____ Telephone: _____

Course Length (hours): _____

COMMENTS:

_____

_____

_____

_____

_____

Attendee Roster (attach additional forms if necessary)

Name	Company	Phone

Appendix C
QISP Information and Certification

Facility Name: Lawrence Berkeley National Laboratory
WDID #: 2 01I002421

Name	Brendan J. Mulholland
QISP Certification Number	#297
Affiliation	Lawrence Berkeley National Laboratory
Phone Number	510-486-5852
Email Address	bjmulholland@lbl.gov
Scope of Services Provided	Stormwater Compliance

CERTIFICATE OF QUALIFICATION

CALIFORNIA INDUSTRIAL GENERAL PERMIT

Qualified Industrial
Stormwater Practitioner (QISP)

Brendan Mulholland

August 4, 2026 - August 7, 2028

Certificate #297

CASQA
CALIFORNIA STORMWATER QUALITY ASSOCIATION

California Stormwater Quality Association and
California Industrial General Permit Training Team

Appendix D
Duly Authorized Representatives

Facility Name: Lawrence Berkeley National Laboratory
WDID #: 2 01I002421

Name	Title	Company	Signature and Date
Jim Buehler	EHS Environmental Service Group Leader	Lawrence Berkeley National Lab	Jim Buehler 10 / 26 / 2026

Appendix E
SWPPP Amendment Certifications

Facility Name: Lawrence Berkeley National Laboratory
WDID #: 2 01I002421

Legally Responsible Person's Certification of the Stormwater Pollution Prevention Plan Amendment

"This Stormwater Pollution Prevention Plan and attachments were prepared under my direction to meet the requirements of the California Industrial General Permit (SWRCB Order No. 2014-0057-DWQ as amended by Order WQ 2015-0122-DWQ and Order WQ 2018-0028-DWQ, NPDES Permit No. CAS000001*)."*

LRP's Signature: Paul Blodgett _____ **Date:** 10 / 27 / 2026

LRP Name: Paul Blodgett
LRP's Affiliation: Interim EHS Division Director, Lawrence Berkeley National Laboratory

Email: pmcblodgett@lbl.gov
Phone: 510-486-6218
Address: Lawrence Berkeley National Laboratory
1 Cyclotron Road, M/S 26R0109
Berkeley, CA 94720

Appendix F
FA Procedure MA.UT.PRC.344

Facilities
BERKELEY LAB

FA PROCEDURE:
Storm Drains – Using Sodium Sulfite/Sodium Thiosulfate to Dechlorinate Domestic Water Discharges: Work Process and Operating Procedure

Effective Date:	11-15-17
Document Number:	MA.UT.PRC.344 (was OPER 344)
Revision Number:	7
Next Review Date:	7-27-2024

1. PROCEDURE PURPOSE

This procedure establishes a work process and operating procedure for managing domestic water discharges to ensure compliance with the existing Storm Water Pollution Prevention Plan and the Storm Water Monitoring Plan.

Specifically exempted from this procedure are discharges from firefighting activities. Discharges from firefighting activities are approved to enter the storm water system without dechlorination, per the State Water Resources Control Board requirements Industrial General Permit. If it is determined by the emergency incident command that hazardous materials are involved, containment of the firefighting runoff will be initiated. For more information, please refer to the Stormwater Pollution Prevention Plan for the Lawrence Berkeley National Lab Site.

2. APPLICABILITY

Manual dechlorination of domestic water discharges using sodium sulfite or sodium thiosulfate solution prior to release into storm sewer systems or receiving waters in accordance with Regional Water Quality Control Board requirements.

Dechlorination of chlorinated water discharges is accomplished by placing tablets of 90% sodium sulfite or sodium thiosulfate in the discharge flow path. For discharges from trenches during main breaks or less extreme and more moderate flow conditions, the tablets are placed inside synthetic mesh fabric pockets sewn together in a grid or line (called a “dechlor mat” or “dechlor strip” respectively). The dechlor mat or strip is laid across the flow path or over the storm drain and either weighed down or nailed to the street to keep it in place. The dechlorinating chemical is released as the water flows over and around the tablets. Effective contact between the flow and the tablets is key. Ensure that the tablets are well distributed across the flow path, spaced no more than 4 in. apart for gravity discharges at ambient pressure. For discharges under pressure (such as pumping), the tablets should be as close together as possible without constricting the flow. The various tablet holder designs are fabricated to ensure that this specification is met.

FA PROCEDURE:
Storm Drains – Using Sodium Sulfite/Sodium Thiosulfate to Dechlorinate Domestic Water Discharges: Work Process and Operating Procedure

3. PROCESS

3.1 Special Instructions

3.1.1 Procedure Scope

This procedure is limited to domestic water discharges with a chlorine residual of 2 mg/L or less. Dechlorinating superchlorinated water (chlorine residual of 50-200 mg/L) is not addressed in this procedure. Contact EH&S, Environmental Services Group, 510-486-7614 or 510-486-5852 (alternate), for guidance on discharging superchlorinated water.

3.1.2 Equipment

- Dechlor mat (3’ x 4’) -or-
- Dechlor strip (3’ x 6”) -or-
- Diffuser with tablet chamber -or-
- Diffuser with mesh tablet holder -and-
- Dechlor tablets (45 lb bucket) -and-
- DPD Powder-Pop Dispenser.

Either dechlor mats or dechlor strips can be used for gravity discharges as long as the tablets are well distributed across the flow path. The mats cover a large area for cases of high, spread out flow and less extreme and more moderate flow conditions. They are sized to cover storm drain inlets, which may be easier than placement upstream. Strips are convenient and flexible. They take up less space in vehicles, and multiple strips can cover large flows.

3.1.3 Tablet Shelf Life/Storage

Tablets have a relatively long shelf life unless exposed to high temperatures (>85F). At higher temperatures, tablets may crumble. During the summer months, crews may need to place enough tablets for daily use in coolers for storage on trucks at the beginning of each work day. Supply buckets must be kept in a cool storage location.

3.1.4 WARNING!

Do not use sodium sulfite/thiosulfate with calcium hypochlorite (HTH) or sodium hypochlorite (used to disinfect water distribution system mains or appurtenances). These chemicals can react when mixed in water, producing heat and hydrogen and chlorine gas, and creating a potentially toxic and explosive/flammable atmosphere. These chemicals and associated mixing and

dispensing equipment must be kept segregated from each other at all times. Should the chemicals become mixed, call the Fire Department at x7911 (486-7911 from off-site phones).

3.2 Work Steps

3.2.1 Fill Pockets with Tablets

Put one tablet in each pocket of the dechlor mat or strip. If the pocket contains a partially-used tablet, add another tablet only if there is room.

3.2.2 Place Dechlor Mat or Strip in Flow Path

Place the dechlor mat or strip across (perpendicular to) the flow path, downstream of sediment control devices (e.g., pea gravel bags). Nail the mat or strip to the street using street nails (through the grommets in either end of the mat) or weigh the mat or strip down to ensure that it stays in place. If the flow path is more than 4 ft wide (width of dechlor mat) when using a dechlor mat or 3 ft wide (width of dechlor strip) when using a dechlor strip, or if there is more than one flow path (flow is spreading out in more than one direction), use additional mats to ensure all water from the source is crossing a mat. If the flow is deep (more than 1in. above the top of the dechlor mat) and/or the flow rate is very high (>300 GPM), place a second mat downstream of the first mat to ensure adequate dechlorination.

3.2.3 Monitor Mat or Strip

Check the dechlor mat periodically to ensure some tablet remains in each pocket and that all flow is crossing at least one mat.

3.2.4 Cleanup

When the discharge is complete, move the dechlor mat(s) or strip(s) to the storm drain(s) where the discharge was entering, placing them on the upstream side of the grate. Hose the flow path to remove any tablet residual, ensuring that the flow enters the storm drain(s) that have dechlor mat(s) or strip(s). If some flow goes to a different storm drain, install a dechlor mat or strip there as well.

3.2.5 Powdered Tablet Waste Disposal

Tablets can be used as long as they are in large enough pieces to be retained within the dechlor mesh, diffuser chamber or diffuser mesh pockets. Small amounts of powdery or granular tablet waste from tablet supply buckets or secondary containers should be mixed with water and discharged to the sanitary

sewer.

4. ROLES AND RESPONSIBILITIES

The list below emphasizes the roles and responsibilities pertinent to only this procedure.

Principal investigators and supervisors	• Ensure that environmental laws, regulations, and policies are followed • Request assistance from the Environmental Services Group (ESG) for technical advice on which environmental requirements apply to their operations, and what would be an appropriate compliance strategy • Provide training for employees in operational requirements pertaining to environmental protection, and maintain records of such training • Ensure that activities are performed within acceptable operating standards and that any required records are current • Notify the Environment, Health, Safety, and Security (EHSS) Division immediately of any unplanned accidental releases

FA PROCEDURE:
Storm Drains – Using Sodium Sulfite/Sodium Thiosulfate to Dechlorinate Domestic Water Discharges: Work Process and Operating Procedure

Employees	• Follow applicable environmental laws, regulations, and policies • Must be fully aware of the environmental impact of their activities, and must comply with all requirements that govern those activities • Adhere to all environmental requirements contained in Berkeley Lab storm-water permits • Perform activities within acceptable operating standards, and maintain current records whenever required • Participate in energy conservation, recycling, pollution-prevention, and waste-minimization programs • Take immediate action to stop unplanned releases to the environment, and report all instances of unplanned environmental releases to the EHSS Division • Complete all required training provided by supervisors and the EHSS Division

FA PROCEDURE:
Storm Drains – Using Sodium Sulfite/Sodium Thiosulfate to Dechlorinate Domestic Water Discharges: Work Process and Operating Procedure

Environmental Services Group	• Develops Berkeley Lab policies and procedures to ensure operations are conducted in an environmentally safe manner and in full compliance with all applicable environmental laws and regulations and DOE orders • Prepares environmental compliance plans and reports as mandated by SWRCB regulations and DOE orders • Assesses current and planned Berkeley Lab programs, and assists in defining environmental-protection compliance upgrades and corrective actions • Prepares budget requests for, and manages, environmental protection upgrades and corrective actions for institutional projects • Provides training, makes presentations, and participates in discussions regarding environmental-protection matters with Berkeley Lab employees, regulatory agencies, concerned public citizens, community organizations, and the media • Manages and applies for storm-water permits • Curtails or suspends any operations that pose an immediate danger to members of the public or the environment • Monitors laboratory discharges to the environment to verify compliance with applicable regulations and permits • Investigates reports of unplanned environmental releases, and notifies federal, state, and local authorities in a timely manner, as required

	• Coordinates and represents Berkeley Lab activities during environmental audits and inspections by regulatory agencies and DOE • Responds to information requests from the public • Participates in DOE audits of off-site analytical laboratories to ensure the quality of analytical results received for environmental-monitoring programs

5. DEFINITIONS

Term	Definition
Pollution prevention	Reducing or eliminating waste at the source by modifying production processes, promoting the use of nontoxic or less-toxic substances, implementing conservation techniques, and reusing materials rather than putting them into the waste stream
State Water Resources Control Board (SWRCB)	The agency responsible for promulgating the California General Permit for Storm Water Discharge Associated with Industrial Activities and the Permit for Storm Water Discharge Associated with Construction Activities. At Berkeley Lab, these permits are administered and enforced by the San Francisco Regional Water Quality Control Board, with assistance from the City of Berkeley.
U.S. Environmental Protection Agency (EPA)	A federal agency responsible for enforcing environmental laws. In California, some of this responsibility is typically delegated to state and local regulatory agencies.

6. IMPLEMENTING DOCUMENTS

Facilities
BERKELEY LAB

FA PROCEDURE:
Storm Drains – Using Sodium Sulfite/Sodium Thiosulfate to Dechlorinate Domestic Water Discharges: Work Process and Operating Procedure

Document	
PUB3000	Ch 57 STORM WATER POLLUTION PREVENTION
07.09.007.000	Storm Water Pollution Prevention

7. CONTACT

Questions on this procedure should be directed to:
FA Site Utilities Technical Manager

8. REVISION HISTORY LOG

REVISION NUMBER	REVISION DATE	BRIEF DESCRIPTION OF CHANGES MADE	NAME OF PERSON MAKING CHANGE
3	8-31-10	Administrative updates	Tim Bauters
4	11-11-13	Administrative updates	Tim Bauters
5	1-17-14	Added verbiage providing the exemption of firefighting domestic water discharges	Tim Bauters
6	10-26-17	Reproduced in new FA procedure template; Revised document number per A. Ward	Laura Chen
7	7-27-21	SME Review/minor reformatting, updated doc properties & new logo	Larry Begley/Yvonne Chavez

9. PROCEDURE APPROVALS

REVIEWER APPROVER AUTHOR	TITLE	NAME
Author	(existing procedure)	

Facilities
BERKELEY LAB

FA PROCEDURE:

Storm Drains – Using Sodium Sulfite/Sodium Thiosulfate to Dechlorinate Domestic Water Discharges: Work Process and Operating Procedure

Reviewer	PMT Supervisor	Jesse Knight
Reviewer	PMT Lead	Mike Botello
Reviewer	EH&S Regulation and Compliance Manager	Jim Buehler
Reviewer	Environmental Water Quality Manager	Brendan J. Mulholland, PG,QSD,QISP
Approver	Facilities Technical Manager	Larry Begley

Appendix G
FA Procedure MA.UT.PRC.002

1. PROCEDURE PURPOSE

Monitoring and measuring the change in turbidity of the south and north forks of Strawberry Creek during hydrant flow testing periods provides assurances that the Facilities Division is meeting guidelines provided in the San Francisco Bay Basin Water Quality Control Plan (Basin Plan) and the Construction General Permit, which stipulates that turbidity shall not be greater than 250 Nephelometric Turbidity Units (NTU).

2. APPLICABILITY

This procedure is only applied to liquid run-off of hydrant flow testing because only hydrants discharge a sufficient quantity of water into the storm water system to potentially impact the turbidity of nearby creeks. Water from standpipe testing is routed to the sanitary sewer system.

3. PROCESS

3.1 General Guidance

Prior to commencement of work, the PMT will notify the EH&S Environmental Services Group's Stormwater Program Manager and UC Berkeley's Stormwater Program Manager of the hydrants to be flushed, date, time, location and receiving creek per Appendix A.

3.1.1 If any part of the procedures or process is unclear or cannot be performed safely or in accordance with the Laboratory's or industry's safety standards, STOP WORK.

3.1.2 Hydrant flow testing must not be initiated until the first significant rain of the season, which is defined as 1 inch of precipitation within a 24-hour period.

3.1.3 Prior to starting the hydrant testing for any given year, the turbidity sensor must be calibrated.

3.1.4 The MRO Supervisor will coordinate with a qualified vendor, per Facilities (see 3.3.1), to arrange for calibration of the sensor.

3.1.5 Upon completion of the calibration, records of the calibration must be uploaded to the Facilities grouper folder within the folder for the appropriate year (see section 3). The MRO Supervisor will print out form FMF-002-01, enter the date the calibration was verified, and print/sign name. The MRO Supervisor will then return the turbidity monitoring equipment and that year's FMF-002-01 to the PMT. Copies will be made available upon request of the EH&S Environmental Services Group's Stormwater Program Manager.

Doc ID: 218a813e8624624835431c155684f1d875806e86

3.2 Instructions

3.2.1 At hydrant testing flow start of the day, the PMT will remove the turbidity monitoring equipment from its storage locker in 076-0123. Prior to departing to the field, the PMT must examine the turbidity equipment to ensure all components are in working order, and connect the radio device to the laptop that will be used for remote monitoring. The PMT will complete the first four columns of FMF-002-01 indicating the date, the name of the PMT using the turbidity monitor that day, and the PMT's initials representing verification of step 3.2.1.

If the turbidity equipment is not in working order, the PMT must notify the MRO Supervisor and shall not proceed with scheduled work. All of the following steps in this section assume that turbidity equipment is fully operational.

3.2.2 The PMT will proceed to the observation point depending on the testing activities identified for the day (see Appendix A).

3.2.3 The PMT will follow the directions provided with the monitoring equipment to initiate monitoring of the creek. The PMT shall check the data logger display to verify readings are being captured. The PMT will check the laptop to verify the data logger readings are being related to the laptop. The PMT will then complete columns five and six of FMF-002-01 to log the time the monitor was placed in the creek with verifying initials.

3.2.3.1 The PMT will communicate to the other PMT's that the monitor is in place, proceed to the testing site with the laptop, and begin monitoring the turbidity levels. If the initial turbidity level is less than 250 NTU, notify the hydrant tester immediately when the reading exceeds 250 NTU.

3.2.4 The PMT will perform work per the job plan while turbidity readings are within the requirements provided in section 3.2.3.1. <u>If readings exceed requirements (250 NTU), discontinue work until readings return to initial levels.</u>

3.2.5 After conclusion of flow testing for the day, the PMT must remove and power down the monitor per instructions included with the equipment. The PMT will log the time the monitor was removed from the creek in column seven of FMF-002-01 and initial column eight to verify completion.

3.2.6 The PMT will proceed to 076-0123 with the monitoring equipment.

3.2.7 Upon return to office, the PMT will upload the information from the data logger into the grouper drive (see section 3) and send a copy to the EH&S

Doc ID: 218a813e8624624835431c155684f1d875806e86

Environmental Services Technical Representative. The PMT will complete columns nine and ten of FMF-002-01 to log the time the data was uploaded and verifying initials.

3.2.8 The PMT will store the turbidity monitoring equipment away properly in its weatherproof enclosure per the equipment instructions. Prior to storing the device, the PMT will complete the remaining columns of FMF-002-01. The form will then be enclosed with the device to be used for future testing dates.

3.2.9 When the final hydrant flow test for the year is complete, FMF-002-01 must be scanned and uploaded into the grouper drive (see section 3).

3.3 Record Retention Requirements

3.3.1 The turbidity monitoring sensor must be calibrated every six months while in daily operation. Due to hydrant flow testing activities occurring during a timeframe of less than six months, Facilities will only require annual calibration of the sensor to be performed prior to the first testing of the year. This task will be performed through a subcontracted service provider, coordinated by the Facilities MRO Supervisor. Upon completion of the calibration, records should be uploaded to G:\Operations_N_Maintenance\Life Safety System Program Info\NFPA 25Wet\Controlled Documents\ITM Records\Turbidity Monitoring\Year\Calibration Records.

3.3.1.1 Calibration records must be maintained for 5 years. At the conclusion of 5 years the records may be destroyed.

3.3.2 The Turbidity Monitoring Form will be updated each time the turbidity monitoring equipment is used. At the conclusion of annual testing for the year, the record will be scanned into the Facilities grouper folder G:\Operations_N_Maintenance\Life Safety System Program Info\NFPA 25 - Wet\Controlled Documents\ITM Records\Turbidity Monitoring\Year\Turbidity Monitoring Forms for the appropriate year.

3.3.2.1 Completed turbidity monitoring records must be maintained for 5 years. At the conclusion of 5 years, the records may be destroyed.

3.3.3 Turbidity monitoring data is continuously gathered during hydrant testing days. At the conclusion of each day, the data is uploaded by the PMT to G:\Operations_N_Maintenance\Life Safety System Program Info\NFPA 25 - Wet\Controlled Documents\ITM Records\Turbidity Monitoring\Year\Turbidity Monitoring Data.

The folder name will be titled “Turbidity Data” and include the date. For

Doc ID: 218a813e8624624835431c155684f1d875806e86

example, data collected on March 1st, 2014 would be titled, "Turbidity Data 03_01_14.

3.3.3.1 Turbidity monitoring data must be maintained for 5 years and available for review by the EH&S Environmental Services Groups Stormwater Program Manager. At the conclusion of 5 years, the data may be destroyed.

3.3.4 Facilities will also send a copy of the turbidity monitoring data to the EH&S Environmental Services Group's Stormwater Program Manager at the conclusion of each hydrant testing day when the turbidity measured exceeds 250 NTU or upon request.

3.4 Tools

3.4.1 Adapter (USB to Data Logger – Xylem Item #FP0070)
3.4.2 Cable (iRIS Adapter – Xylem Item #FP0070)
3.4.3 Data Logger (iRIS 150 – Xylem Item #FP0125)
3.4.4 Laptop
3.4.5 Remote monitoring radio device
3.4.6 Turbidity Sensor (WQ730 – Xylem Item #DFJ000)
3.4.7 Weather Proof Enclosure (GL500-2-1 – Xylem Item #FB0150)

4. ROLES AND RESPONSIBILITIES

The list below emphasizes the roles and responsibilities pertinent to only this procedure.

4.1 EH&S Environmental Service Group's Stormwater Program Manager

- Ensures stormwater compliance with regulatory agencies, and may consult with Facilities Division regarding stormwater concerns.
- Provides technical expertise and requirements guidance concerning the turbidity monitoring program.
- Reviews collected data when turbidity measurements exceed 250 NTU.

4.2 MRO Supervisor

- Provides operational guidance to the Plant Maintenance Technician.
- Verifies annual calibration of monitoring equipment prior to start of seasonal testing.

4.3 Plant Maintenance Technician (PMT)

- Performs the day to day monitoring activities.
- Uploads records and data to the Facilities grouper server, per section 3 of this document.

Doc ID: 218a813e8624624835431c155684f1d875806e86

- Sends a copy of the turbidity monitoring data to the EH&S Environmental Service Group's Stormwater Program Manager when turbidity readings exceed 250 NTU.

5. DEFINITIONS

TERM	DEFINITION
Nephelometric Turbidity Units	Units of turbidity from a calibrated nephelometer.
Turbidity	Is the cloudiness or haziness of a fluid caused by individual particles that are generally, but not always, invisible to the naked eye. The measurement of turbidity is a key test of water quality.

6. REFERENCES

6.1 Source Requirements

- San Francisco Bay Basin (Region 2) Water Quality Control Plan (Basin Plan)
- State Water Resources Control Board (SWRCBor the Water Board) Water Quality Order No. 2014-0057-DWQ, as amended by orders 2015-0122-DWQ and 2018-0028-DWQ.
- Stormwater Pollution Prevention Plan For Industrial Activities, October 2024

6.2 Implementing Documents

- FMF-002-01 Turbidity Monitoring Form
- Annual Hydrant Flow Testing preventive maintenance job plan
- MA.MG.PRC.344 (was OPER-344) Storm Drains – Using Sodium Sulfite/Sodium Thiosulfate to Dechlorinate Domestic Water Discharges: Work Process & Operating Procedure

Doc ID: 218a813e8624624835431c155684f1d875806e86

7. PROCESS MAP



*Items in green occur only once per year.

8. METRICS

9. CONTACT

FA Site Utilities and Maintenance Manager

10. REVISION LOG

REVISION NUMBER	REVISION DATE	BRIEF DESCRIPTION OF CHANGES MADE	NAME OF PERSON MAKING CHANGE
1	5-23-17	Administrative changes	
2	3-6-18	Minor changes per Brendan Mulholland; reviewed by R. Romero; commented by R. Fox. Document number change per A. Ward.	Laura Chen
3	9-18-24	Minor changes per Brendan Mulholland; reviewed by R. Romero; commented by R. Fox. Document number change per A. Ward.	Brendan Mulholland, Jesse Knight, James Eleftherion, James Harris, Yvonne Chavez

Doc ID: 218a813e8624624835431c155684f1d875806e86

12. PROCEDURE APPROVAL

REVIEWER APPROVER	TITLE	NAME	SIGNATURE	DATE
Reviewer	Environmental Water Quality Manager	Brendan Mulholland	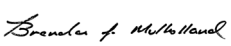	10 / 14 / 2024
Reviewer	Facilities Tech Supervisor	Jesse Knight		10 / 14 / 2024
Reviewer	Facilities Tech Supervisor	James Eleftherion		10 / 14 / 2024
Reviewer	Facilities Tech Supervisor	James Harris	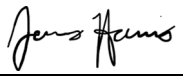	10 / 14 / 2024
Approver	Mechanical Systems Technical Manager	Steve Alford		10 / 14 / 2024

Doc ID: 218a813e8624624835431c155684f1d875806e86

Appendix A
Observation Points

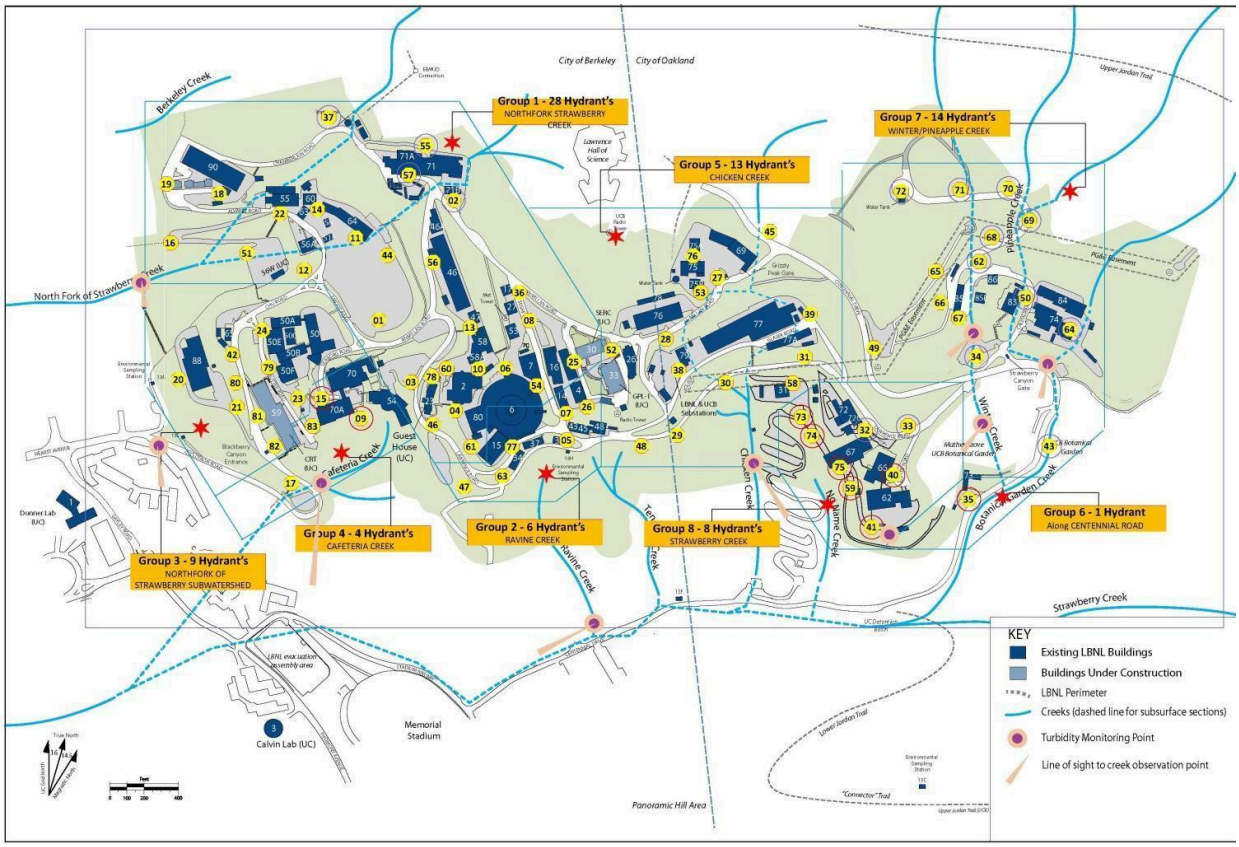

Doc ID: 218a813e8624624835431c155684f1d875806e86

Appendix H
FA Procedure MA.UT.PRC.345

1. PROCEDURE PURPOSE

This document describes the process for managing the wastewater generated through the operations of cleaning the exterior of buildings. Wastewater is prohibited from being discharged into storm drains.

2. APPLICABILITY

This procedure applies to wastewater management for wash water produced during the cleaning of building exteriors. Wash water may contain chloramines, cleaning compounds, or materials dislodged from building surfaces (such as leaded painted) and cannot be discharged to storm drains.

3. PROCESS

3.1 Special Instructions

3.1.1 Task Hazard Analysis

Supervisor will develop Task Hazard Analysis. Health & Safety, Waste Management, and Environmental Services Groups will review.

3.1.2 Offsite Disposal Consideration

Offsite disposal through the Environment, Health and Safety (EHS) Division may be necessary if contaminants in the wash water exceed sewer discharge contaminant limits. If cleaning compounds containing surfactants, detergents, or other chemicals are used in the cleaning process and there are sludges or residues that need to be disposed of, contact Waste Management Group, Generator Assistant for disposal guidance.

3.1.3 Onsite Disposal Consideration

Wastewater may be disposed to landscaped areas or the sanitary sewer if contaminant concentrations will not harm the landscape or sewage treatment facility's operations, or exceed Berkeley Lab's Wastewater Discharge Permit limits listed in the permit issued by East Bay Municipal Utility District. Contact Environmental Group for guidance regarding disposal to landscaped areas or the sanitary sewer.

3.1.4 Contacting EH&S

Before starting work, contact EHS (Health & Safety, Waste Management and Environmental Services) for technical assistance to determine appropriate methodologies, scope, job plan and mitigation for specific planned task.

3.2 Wash Water Disposal – Unpainted Buildings

3.2.1 Protect Storm Drains

Construct a containment system to prevent wash water discharge to the storm drain. Protect nearby, downstream storm drains.

3.2.2 Filter Out Solids

If high-pressure water is used (e.g. hydro-blasting to remove spalled concrete):

- Settle out the solids using a containment tank, or
- Filter out the solids using a filter fabric or another solids removal method.

3.2.3 Divert Wash Water

Divert wash water onto landscaping (preferably) or into the sanitary sewer.

3.3 Wash Water Disposal – Painted Buildings

3.3.1 Protect Storm Drains

Construct a containment system to prevent wash water discharge to the storm drain or sanitary sewer. Protect nearby, downstream storm drains.

3.3.2 Contain Wash Water

Pour, pump, or drain the wash water into a containment tank.

3.3.3 Use Filter System

Use a filter system (e.g., cartridge filters) to remove suspended paint solids. Use settling methods to minimize the amount of solids entering the filter system. This will prevent filter saturation.

3.3.4 Contact EH&S

- Have the sample analyzed for the 13 priority pollutant metals (antimony, arsenic, beryllium, cadmium, chromium, copper, lead, mercury, nickel, selenium, silver, thallium, zinc) and any other chemicals of concern that could be present to determine whether or not the water is suitable for sanitary sewer discharge. (Sampling performed by FA or FA contractor, and discussed with EHS Waste Management Group.)
- Send a copy of the analytical results to Environmental Services Group and Waste Management Group, Generator Assistant for disposal method determination.

3.3.5 Limits Exceeding EBMUD

If the analytical results exceed EBMUD discharge limits, consider using a finer pore size filter or dispose of the water through EHS. EHS Waste Management Group will arrange to ship the water to a properly permitted disposal facility.

4. ROLES AND RESPONSIBILITIES

The list below emphasizes the roles and responsibilities pertinent to only this procedure.

4.1 Supervisor

- Develops Task Hazard Analysis
- Contacts EHS for technical assistance to determine appropriate methodology, scope, job plan, and mitigation
- Ensures EHS representatives from Health & Safety, Waste Management and Environmental Protection Groups review the process
- Provides EHS a project ID number for analysis of wastewater

4.2 EHS

- Provides oversight and determines if pressure washing is allowable based upon known hazards of the building. FA or FA contractor will perform sampling.
- Identifies contaminants to be analyzed and assesses analytical reports against regulatory levels.
- Environmental Services Group reviews (EBMUD) sanitary sewer discharge contaminant limits
- Determines onsite or offsite waste water disposal method using disposal guidance

5. DEFINITIONS

TERM	DEFINITION
Wastewater	Water discharged after the cleaning of buildings
Water wash	Water generated to wash the exterior of buildings

6. REFERENCES

6. 1 Source Requirements Documents	
Requirement ID	**Title**
PUB3000	Chapter 57 – Storm Water Pollution Prevention
6. 2 Related Implementing Documents	
Document Number	**Title**
MA.MG.PRC.056	Rainwater Disposal
MA.UT.PRC.344	Storm Drains - Dechlorination of Domestic Water Discharges

7. PROCESS MAP

NA

8. METRICS

None

9. CONTACT

FA Operations Manager

10. REVISION HISTORY LOG

REVISION NUMBER	REVISION DATE	BRIEF DESCRIPTION OF CHANGES MADE	NAME OF PERSON MAKING CHANGE
2	02-22-18	(existing document), MA.MG.PRC.345 (was OPER -345)	
3	10-26-17	Reviewed with minor edits; Assigned new document number and reproduced in new procedure template	Laura Chen
4	08-21-29	SME Review, updated formatting, references, Reviewers	Solomon Guzman, Paul Castro, Brendan Mulholland, Laurence Rangel, Yvonne Chavez

11. PROCEDURE APPROVALS

REVIEWER APPROVER	TITLE	NAME	SIGNATURE	DATE
Reviewer	FA Tech Supervisor	Paul Castro		
Reviewer	FA Tech Supervisor	Laurence Rangel		
Reviewer	ESG Stormwater Program Manager	Brendan Mulholland		
Reviewer	Laborer, Crew Leader	Salomon Guzman		
Approver	FA Maintenance and Operations Dept Head	Ryan Velasco		

12. APPENDICES – N/A

Appendix I
FA Procedure MA.MG.PRC.328

Facilities BERKELEY LAB	**BLDG 76 FUEL SPILL CONTAINMENT BASIN**	Document No: MA.MG.PRC.328 (was OPER-328) Effective Date: 12/06/2017 Rev: 5 Next Review Date: 9/18/2024

1. PROCEDURE PURPOSE

The purpose of the Fuel Spill Containment Basin is to collect gasoline and diesel fuel released by accidental spills in the fueling area and to prevent their entry into the storm sewer system.

Procedure outlines the process for weekly inspection and monthly (or post-spill) cleaning of Fuel Spill Containment Basin located outside of Building 76 yard area, adjacent to fuel pumps.

2. APPLICABILITY

This procedure applies to Plant Maintenance Technical personnel that monitor and perform related work activities. The work steps described are executed safely in the field consistent with the Integrated Safety Management (ISM) core functions and guiding principles

3. PROCESS

3.1 Weekly Check by the Plant Maintenance Technicians (PMT) of the Containment Basin located outside the Bldg 76 Motor Pool Yard and Monthly Replacement of Absorbent Pads

3.1.1 Looking through gratings, visually check both compartments for debris and oil sheen.

3.1.2 Complete checklist as attached on the last page.

3.1.3 If oil sheen covers the surface or is visible through the absorbent pads, replace the absorbent pads.

3.1.4 Absorbent pads will be replaced at a minimum on a monthly basis or as required following the weekly inspections.

3.2 Cleaning the Containment Basin on a Quarterly Basis (PMT)

3.2.1 On a quarterly basis, during the months of January, April, July, and October, pump out water in both compartments of the Containment Basin. Inspect the empty vault and remove any accumulated sediment or debris.

3.2.2 Using the water hose located at the fuel pump station, refill the Containment Basin until water level reaches the outfall pipe, add thiosulfate tablets to the water to remove anti-chloramines.

3.2.3 Place a new particulate filter in the trap compartment and absorbent pads in the discharge compartment of the Containment Basin.

3.3 Special Instructions

3.3.1 The purpose of the Fuel Spill Containment Basin is to collect gasoline and diesel fuel released by accidental spills in the fueling area and to prevent their entry into the storm sewer system.

Doc ID: 4fed7ab844a90acc5aff7d0079c4878515d18c82

3.3.2 Deliberate disposal of gasoline, diesel fuel, or other substances in the Fuel Spill Containment Basin is not permitted.

3.3.3 In the event of a fuel spill or release of other substances such as antifreeze:

1) PMT must follow the instructions posted next to the fuel pumps for proper spill cleanup.
2) PMT pumps spilled fuel into a drum or tank for proper disposal.
3) PMT must notify EHS (X6999) if spilled material enters the storm sewer system.

3.3.4 The Fuel Spill Containment Basin consists of two compartments. One of these compartments traps any fuel runoff, (trap compartment) while the other allows storm runoff (rainwater) to enter the storm sewer system (discharge compartment), as shown in the following figure:

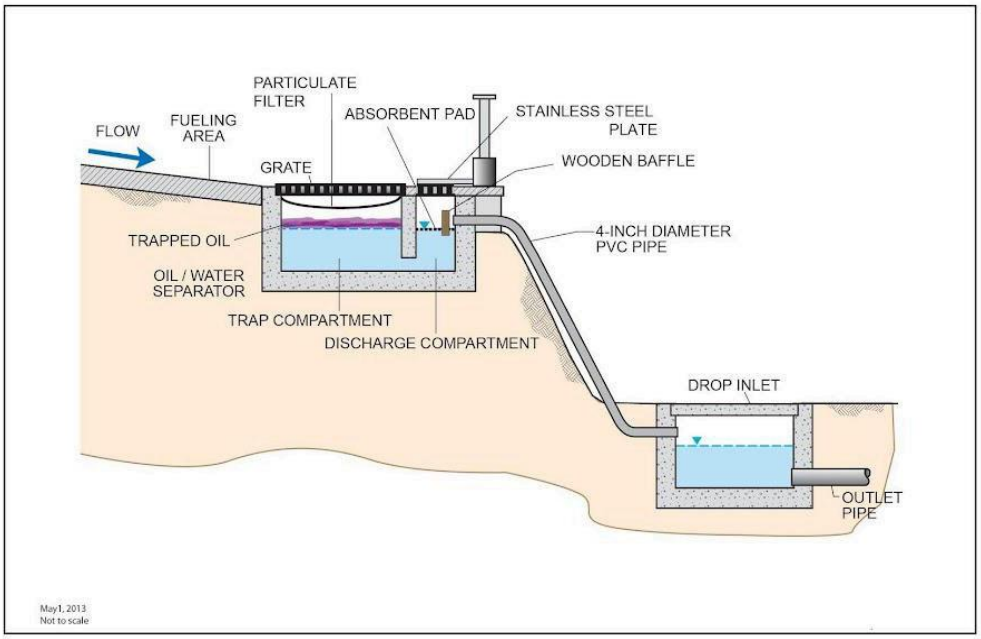

4. ROLES AND RESPONSIBILITIES

4.1 Assigned Plant Maintenance Technician (PMT) is responsible for weekly, monthly, and quarterly inspections and maintenance, replacement of the absorbent pads and cleaning of the Fuel Spill Containment Basin.

5. DEFINITIONS – N/A

Doc ID: 4fed7ab844a90acc5aff7d0079c4878515d18c82

TERM	DEFINITION

6. REFERENCES – N/A

6.1 Source Requirement Documents	
Requirement ID	**Title**
6.2 Related Implementing Documents	
Requirement ID	**Title**

7. PROCESS MAP – N/A

8. METRICS – N/A

9. CONTACT

FA Site Utilities and Maintenance Manager

10. REVISION HISTORY LOG

REVISION NUMBER	REVISION DATE	BRIEF DESCRIPTION OF CHANGES MADE	NAME OF PERSON MAKING CHANGE
2	5-17-17	(existing procedure)	Tim Bauters
3	5-23-17	Administrative Changes	Brendan J. Mulholland
4	5-01-18	Convert to new template/reformatting	Laura Chen

Doc ID: 4fed7ab844a90acc5aff7d0079c4878515d18c82

5	9-18-24	SME review, updated title & doc format	Mike Botello, Jesse Knight, James Harris, James Eleftherion, Yvonne Chavez

11. PROCEDURE APPROVALS

REVIEWER APPROVER	TITLE	NAME	SIGNATURE	DATE
Reviewer	EHS Environmental Water Quality Manager	Brendan Mulholland		10 / 11 / 2024
Reviewer	Facilities Compliance Specialist	Mike Botello		10 / 14 / 2024
Reviewer	Facilities Tech Supervisor	James Eleftherion		10 / 14 / 2024
Reviewer	Facilities Tech Supervisor	James Harris		10 / 12 / 2024
Approver	Mechanical Systems Technical Manager	Steve Alford		10 / 14 / 2024

12. APPENDICES

Doc ID: 4fed7ab844a90acc5aff7d0079c4878515d18c82

ATTACHMENT A

CHECKLIST B76- O/W Separator

Inspection Frequency: (Circle) **Weekly Monthly Quarterly**		
Visual Inspection of the B76 area	**Circle appropriate**	
Are any obvious recent fuel spills visible (identified by recent stains on the concrete or asphalt)?	YES	NO
Is any leftover absorbent present on the ground?	YES	NO
Are the dumpster lids closed?	YES	NO
Visual Inspection of the O/W Separator "Trap Compartment"		
Has debris/dirt accumulated?	YES	NO
Is fuel/oil sheen visible?	YES	NO
Were absorbent pads replaced (if oil was visible on the surface of the pads)?	YES	NO
Visual Inspection of the O/W Separator "Discharge Compartment" (lift metal plate)		
Has debris/dirt accumulated?	YES	NO
Is fuel/oil sheen visible through the absorbent pads?	YES	NO
Is entire surface of the compartment covered with fuel/oil sheen?	YES	NO

Observations made by:

Name	Date	Signature

Doc ID: 4fed7ab844a90acc5aff7d0079c4878515d18c82

Appendix J
EHS Procedure 870

Lawrence Berkeley National Laboratory
Environment, Health & Safety Division
Waste Management Group

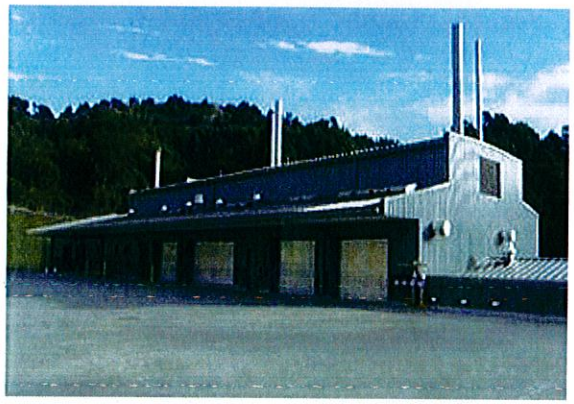

Discharge of Storm Water through Storm Drains at the Building 85 Yards

EH&S Procedure 870

Revision 4
Effective Date: May 23, 2012

Approved By: _____ Date: 5/23/2012
Roshan Shadlou
HWHF Operations Team Leader
Waste Management Group
Environment, Health & Safety Division

Approved By: _____ Date: 5/23/2012
Nancy Rothermich
Waste Management Group Leader
Environment, Health & Safety Division

Discharge of Storm Water through Storm Drains at the Building 85 Yards

In this Procedure

Section	Topic	See Page
1	Overview	2
2	Procedure	4
3	Records	6
4	Revision Record	6

Note: The official version of this procedure is on the Waste Management Web page. Printed copies are not official versions of the procedure. Before using the printed copy, verify that it is the most current version.
Source file: Revised pcEHS870rev4_FINAL-FOR-SIGNATURE.docx

1. Overview

1.1 Purpose

This procedure describes the process used to drain the upper and lower yard sumps at Building 85, the Hazardous Waste Handling Facility (HWHF). The sumps drain into the storm-water drainage system.

1.2 Scope

This procedure applies to the sumps in the upper and lower yards at Building 85.

1.3 Overview of System

There are two yards at Building 85: the upper yard and the lower yard. Each yard contains a sump with two valves that control the release of discharges to the storm water drains. These two valves are called the lower valve and the upper valve (see Figure 1-1). When the lower valve of a sump is closed and the upper valve is open, several hundred gallons of liquid can accumulate in the sump before the accumulated liquid will flow through the upper valve into the storm water drains. Each sump drains separately to the storm drain.

With the lower valve closed, an accidental liquid waste spill of up to one 55-gallon drum can be totally contained within the sump. Hence, under the normal operating conditions for the Building 85 sumps, the lower valve should always be closed and the upper valve should always be open. These normal operating positions are indicated by signage or on the yard surface by each valve. After any rainstorm, the lower valve should be opened to drain the sump of collected rainwater after checking the accumulated water for sheen or extraneous materials not expected to be in the sump.

Continued on next page.

1. Overview (continued)

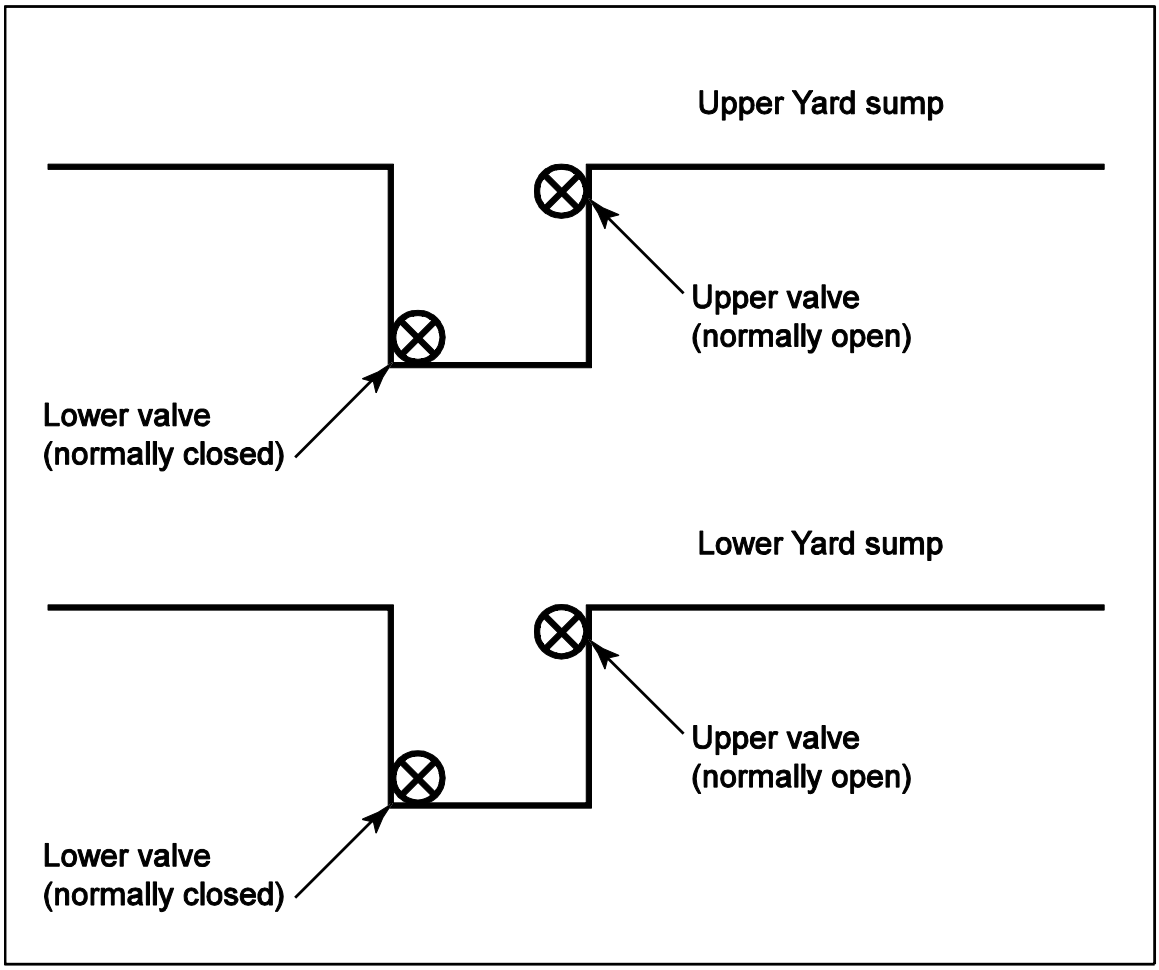

Figure 1-1. Schematic of upper and lower yard sumps.

2. Procedure

2.1 Preoperational Requirements

The following rules apply to the valves in the Building 85 yards:

- The **lower** valve in each sump is **normally closed**.
- The **upper** valve in each sump is **normally open**.

2.2 Procedure

The HWHF Operations Team Technicians perform all tasks described in this procedure.

2.2.1 Opening and Closing Valves

Open and close valves as follows:

1. To **open** a valve in the Building 85 yards, place the T-handle in the hole above the valve, make sure the handle has set securely on the valve turning device, and turn the handle **counterclockwise**. The valves are geared so that about 20 turns are required to open a valve fully.

2. To **close** a valve in the Building 85 yards, place the T-handle in the hole in the yard above the valve, make sure the handle has set securely on the valve turning device, and turn the handle **clockwise**.

2.2.2 Tasks after Each Rainstorm

1. Before opening the lower valve, check the accumulated water in the sump to ensure that there is no indication of an abnormal condition (for example, a thin oil sheen).

2. If contamination is suspected, take a grab sample by following the steps listed below (Section 2.2.3) for spills of liquid waste.

Continued on next page.

2. Procedure (continued)

2.2.2 Tasks after Each Rainstorm (continued)

3. If no abnormal condition is observed, manually open the lower valve of each sump to drain the accumulated rainwater into the storm water drain, so that the accumulated rainwater will not become stagnant or become mixed with liquid waste in the event of an accidental spill.

2.2.3 For Spills of Liquid Waste

Do the following steps after any spill of liquid waste that could reach a sump, or if there is evidence that the accumulated water in the sump is contaminated.

1. Close the upper valve.
2. Take a grab sample from the sump.
3. Have the sample analyzed for hazardous and radioactive components if the spill was in the lower yard, or for hazardous components only if the spill was in the upper yard.
4. Keep closed both valves of the sump involved in the spill, and cover the sump with magnetic covers until analysis results have verified absence of hazardous and/or radioactive components.

2.2.4 Daily Inspection

1. Check the sumps on a daily basis. Drain the sump if there is any liquid in the sump. Record the action on the daily inspection sheet.
2. Check the lower valve to make sure it is in a closed position.
3. On a weekly basis, check the upper valve to make sure it is in an open position.

3. Records

3.1 Records Created

The following Operating records may be created by this procedure:

- Daily and weekly inspection records
- Analytical results of collected liquid in case of spill

A list of operating and programmatic records can be found on the G Drive, in the WM folder "Procedures, Records, Governing Documents, References," along with their location, care, and maintenance requirements.

3.2 References

A list of references and governing documents can be found on the G Drive, in the WM folder "Procedures, Records, Governing Documents, References."

4. Revision Record

Revision	Date	Changes
3	4/21/08	Current version
4	5/23/12	Procedure revised due to changes to inspection requirements, and periodic review per QA requirements

Appendix K
Selected CASQA BMP Fact Sheets

Scheduling EC-1

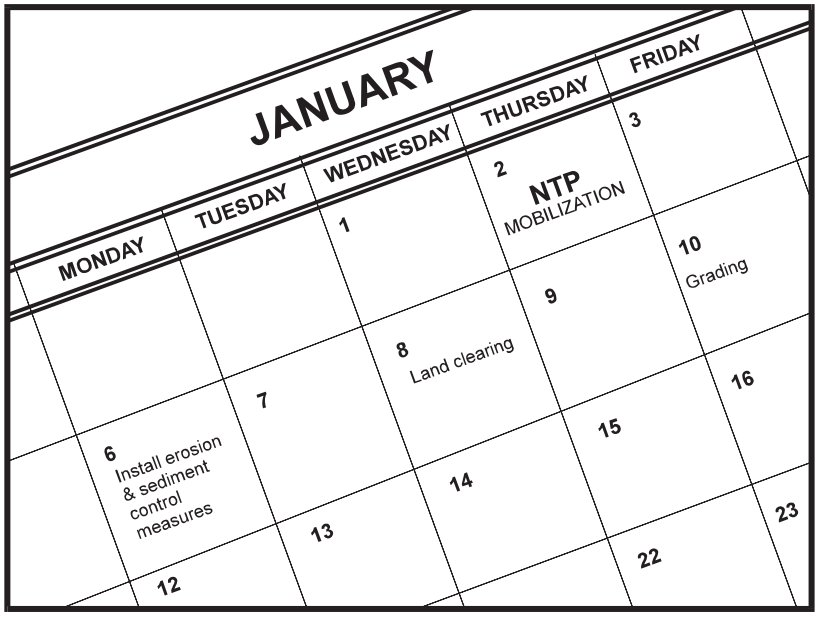

Description and Purpose

Scheduling is the development of a written plan that includes sequencing of construction activities and the implementation of BMPs such as erosion control and sediment control while taking local climate (rainfall, wind, etc.) into consideration. The purpose is to reduce the amount and duration of soil exposed to erosion by wind, rain, runoff, and vehicle tracking, and to perform the construction activities and control practices in accordance with the planned schedule.

Suitable Applications

Proper sequencing of construction activities to reduce erosion potential should be incorporated into the schedule of every construction project especially during rainy season. Use of other, more costly yet less effective, erosion and sediment control BMPs may often be reduced through proper construction sequencing.

Limitations

- Environmental constraints such as nesting season prohibitions reduce the full capabilities of this BMP.

Implementation

- Avoid rainy periods. Schedule major grading operations during dry months when practical. Allow enough time before rainfall begins to stabilize the soil with vegetation or physical means or to install sediment trapping devices.

Categories

EC	Erosion Control	☑
SE	Sediment Control	☒
TC	Tracking Control	☒
WE	Wind Erosion Control	☒
NS	Non-Stormwater Management Control	
WM	Waste Management and Materials Pollution Control	

Legend:

☑ **Primary Objective**

☒ **Secondary Objective**

Targeted Constituents

Sediment	☑
Nutrients	
Trash	
Metals	
Bacteria	
Oil and Grease	
Organics	

Potential Alternatives

None

Copyright 2026 by the California Stormwater Quality Association

CASQA
CALIFORNIA STORMWATER QUALITY ASSOCIATION®

- Plan the project and develop a schedule showing each phase of construction. Clearly show how the rainy season relates to soil disturbing and re-stabilization activities. Incorporate the construction schedule into the SWPPP.
- Include on the schedule, details on the rainy season implementation and deployment of:
  - Erosion control BMPs
  - Sediment control BMPs
  - Tracking control BMPs
  - Wind erosion control BMPs
  - Non-stormwater BMPs
  - Waste management and materials pollution control BMPs
- Include dates for activities that may require non-stormwater discharges such as dewatering, sawcutting, grinding, drilling, boring, crushing, blasting, painting, hydro-demolition, mortar mixing, pavement cleaning, etc.
- Work out the sequencing and timetable for the start and completion of each item such as site clearing and grubbing, grading, excavation, paving, foundation pouring utilities installation, etc., to minimize the active construction area during the rainy season.
  - Sequence trenching activities so that most open portions are closed before new trenching begins.
  - Incorporate staged seeding and re-vegetation of graded slopes as work progresses.
  - Schedule establishment of permanent vegetation during appropriate planting time for specified vegetation.
- Non-active areas should be stabilized as soon as practical after the cessation of soil disturbing activities or one day prior to the onset of precipitation.
- Monitor the weather forecast for rainfall.
- When rainfall is predicted, adjust the construction schedule to allow the implementation of soil stabilization and sediment treatment controls on all disturbed areas prior to the onset of rain.
- Be prepared year-round to deploy erosion control and sediment control BMPs. Erosion may be caused during dry seasons by un-seasonal rainfall, wind, and vehicle tracking. Keep the site stabilized year-round and retain and maintain rainy season sediment trapping devices in operational condition.

- Apply permanent erosion control to areas deemed substantially complete during the project's defined seeding window.
- Avoid soil disturbance during periods with high wind velocities.

Inspection and Maintenance

- Verify that work is progressing in accordance with the schedule. If progress deviates, take corrective actions.
- Amend the schedule when changes are warranted.
- Amend the schedule prior to the rainy season to show updated information on the deployment and implementation of construction site BMPs.

References and Additional Resources

Construction Site Best Management Practices (BMPs) Manual, CTSW-RT-24-425.11.1, California Department of Transportation (Caltrans), March 2024.

Storm Water Management for Construction Activities Developing Pollution Prevention Plans and Best Management Practices (EPA 832-R-92-005), U.S. Environmental Protection Agency, Office of Water, September 1992.

Preservation of Existing Vegetation EC-2

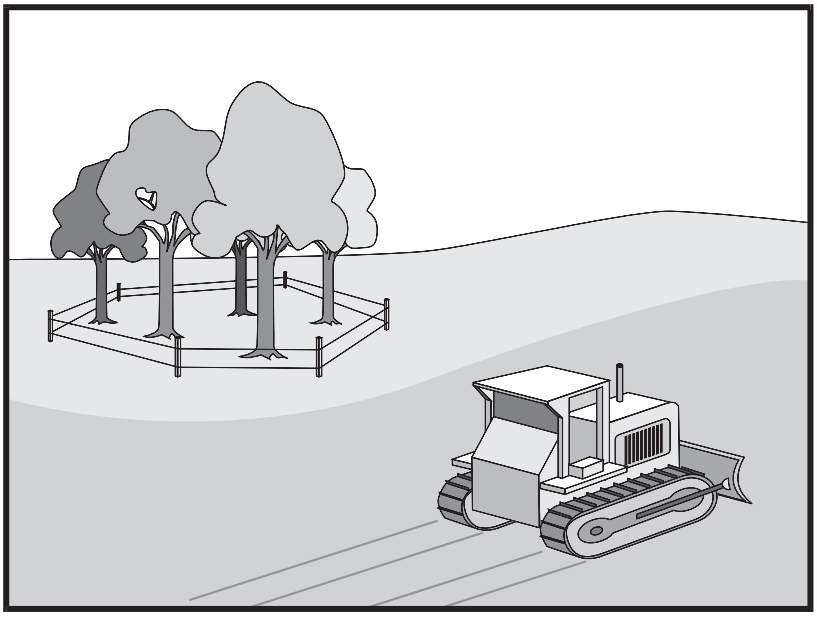

Categories

EC	Erosion Control	☑
SE	Sediment Control	
TC	Tracking Control	
WE	Wind Erosion Control	
NS	Non-Stormwater Management Control	
WM	Waste Management and Materials Pollution Control	

Legend:

☑ **Primary Objective**

☒ **Secondary Objective**

Targeted Constituents

Sediment	☑
Nutrients	
Trash	
Metals	
Bacteria	
Oil and Grease	
Organics	

Potential Alternatives

None

Description and Purpose

Carefully planned preservation of existing vegetation minimizes the potential of removing or injuring existing trees, vines, shrubs, and grasses that protect soil from erosion.

Suitable Applications

Preservation of existing vegetation is suitable for use on most projects. Large project sites often provide the greatest opportunity for use of this BMP. Suitable applications include the following:

- Areas within the site where no construction activity occurs or occurs at a later date. This BMP is especially suitable to multi year projects where grading can be phased.
- Areas where natural vegetation exists and is designated for preservation. Such areas often include steep slopes, watercourse, and building sites in wooded areas.
- Areas where local, state, and federal government require preservation, such as vernal pools, wetlands, marshes, certain oak trees, etc. These areas are usually designated on the plans, or in the specifications, permits, or environmental documents.
- Where vegetation designated for ultimate removal can be temporarily preserved and be utilized for erosion control and sediment control.
- Protecting existing vegetation buffers and swales.

Copyright 2026 by the California Stormwater Quality Association

Limitations

- Requires forward planning by the owner/developer, contractor, and design staff.
- Limited opportunities for use when project plans do not incorporate existing vegetation into the site design.
- For sites with diverse topography, it is often difficult and expensive to save existing trees while grading the site satisfactory for the planned development.

Implementation

The best way to prevent erosion is to not disturb the land. In order to reduce the impacts of new development and redevelopment, projects may be designed to avoid disturbing land in sensitive areas of the site (e.g., natural watercourses, steep slopes), and to incorporate unique or desirable existing vegetation into the site's landscaping plan. Clearly marking and leaving a buffer area around these unique areas during construction will help to preserve these areas as well as take advantage of natural erosion prevention and sediment trapping.

Existing vegetation to be preserved on the site must be protected from mechanical and other injury while the land is being developed. The purpose of protecting existing vegetation is to ensure the survival of desirable vegetation for shade, beautification, and erosion control. Mature vegetation has extensive root systems that help to hold soil in place, thus reducing erosion. In addition, vegetation helps keep soil from drying rapidly and becoming susceptible to erosion. To effectively save existing vegetation, no disturbances of any kind should be allowed within a defined area around the vegetation. For trees, no construction activity should occur within the drip line of the tree.

Timing

- Provide for preservation of existing vegetation prior to the commencement of clearing and grubbing operations or other soil disturbing activities in areas where no construction activity is planned or will occur at a later date.

Design and Layout

- Mark areas to be preserved with temporary fencing. Include sufficient setback to protect roots.
  - Orange colored plastic mesh fencing works well.
  - Use appropriate fence posts and adequate post spacing and depth to completely support the fence in an upright position.
- Locate temporary roadways, stockpiles, and layout areas to avoid stands of trees, shrubs, and grass.
- Consider the impact of grade changes to existing vegetation and the root zone.
- Maintain existing irrigation systems where feasible. Temporary irrigation may be required.
- Instruct employees and subcontractors to honor protective devices. Prohibit heavy equipment, vehicular traffic, or storage of construction materials within the protected area.

- Consider pruning or mowing vegetation instead of removing it to allow for regrowth.
- If possible, retain vegetation buffer around the site and adjacent waterways.

Inspection and Maintenance

During construction, the limits of disturbance should remain clearly marked at all times. Irrigation or maintenance of existing vegetation should be described in the landscaping plan. If damage to protected trees still occurs, maintenance guidelines described below should be followed:

- Verify that protective measures remain in place. Restore damaged protection measures immediately.
- Serious tree injuries shall be attended to by an arborist.
- Damage to the crown, trunk, or root system of a retained tree shall be repaired immediately.
- Trench as far from tree trunks as possible, usually outside of the tree drip line or canopy. Curve trenches around trees to avoid large roots or root concentrations. If roots are encountered, consider tunneling under them. When trenching or tunneling near or under trees to be retained, place tunnels at least 18 in. below the ground surface, and not below the tree center to minimize impact on the roots.
- Do not leave tree roots exposed to air. Cover exposed roots with soil as soon as possible. If soil covering is not practical, protect exposed roots with wet burlap or peat moss until the tunnel or trench is ready for backfill.
- Cleanly remove the ends of damaged roots with a smooth cut.
- Fill trenches and tunnels as soon as possible. Careful filling and tamping will eliminate air spaces in the soil, which can damage roots.
- If bark damage occurs, cut back all loosened bark into the undamaged area, with the cut tapered at the top and bottom and drainage provided at the base of the wood. Limit cutting the undamaged area as much as possible.
- Aerate soil that has been compacted over a trees root zone by punching holes 12 in. deep with an iron bar and moving the bar back and forth until the soil is loosened. Place holes 18 in. apart throughout the area of compacted soil under the tree crown.
- Fertilization:
    - Fertilize trees in the late fall or early spring. Although to note, many native species do not require fertilization.
    - Apply fertilizer to the soil over the feeder roots and in accordance with label instructions, but never closer than 3 ft to the trunk. Increase the fertilized area by one-fourth of the crown area for conifers that have extended root systems.
- Retain protective measures until all other construction activity is complete to avoid damage during site cleanup and stabilization.

References and Additional Resources

Construction Site Best Management Practices (BMPs) Manual, CTSW-RT-24-425.11.1, California Department of Transportation (Caltrans), March 2024.

County of Sacramento Tree Preservation Ordinance, September 1981.

Storm Water Management of the Puget Sound Basin, Technical Manual, Publication #91-75, Washington State Department of Ecology, February 1992.

Water Quality Management Plan for The Lake Tahoe Region, Volume II, Handbook of Management Practices, Tahoe Regional Planning Agency, November 1988.

Hydroseeding EC-4

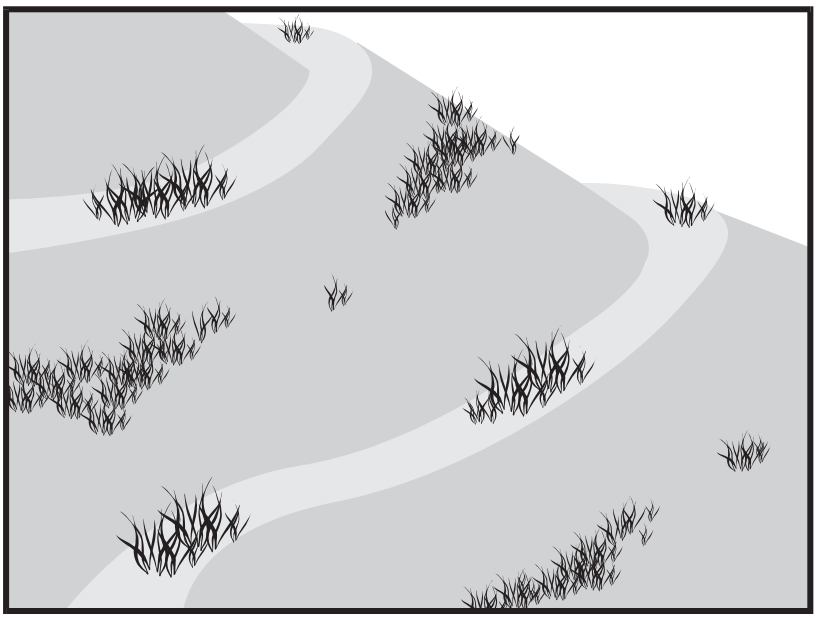

Categories

EC	Erosion Control	☑
SE	Sediment Control	
TC	Tracking Control	
WE	Wind Erosion Control	☒
NS	Non-Stormwater Management Control	
WM	Waste Management and Materials Pollution Control	

Legend:
☑ **Primary Category**
☒ **Secondary Category**

Targeted Constituents

Sediment	☑
Nutrients	
Trash	
Metals	
Bacteria	
Oil and Grease	
Organics	

Potential Alternatives

EC-3 Hydraulic Mulch
EC-5 Soil Binders
EC-6 Straw Mulch
EC-7 Geotextiles and Mats
EC-8 Wood Mulching
EC-14 Compost Blanket
EC-16 Non-Vegetative Stabilization

Copyright 2026 by the California Stormwater Quality Association

Description and Purpose

Hydroseeding typically consists of applying a mixture of a hydraulic mulch, seed, and water with the possible addition of tackifier, compost, mycorrhizae inoculant, fertilizer, and/or soil conditioner, to temporarily protect exposed soils from erosion by water and wind. Hydraulic seeding, or hydroseeding, is simply the method by which temporary or permanent seed is applied to the soil surface and temporary erosion control is established by means of the mulch component.

Suitable Applications

Hydroseeding is suitable for disturbed areas requiring temporary protection until permanent stabilization is established, for disturbed areas that will be re-disturbed following an extended period of inactivity, or to apply permanent stabilization measures. Hydroseeding without mulch or other cover (e.g., EC-7, Geotextiles and Mats) is not a stand-alone erosion control BMP and should be combined with additional measures until vegetation establishment.

Typical applications for hydroseeding include:

- Disturbed soil/graded areas where permanent stabilization or continued earthwork is not anticipated prior to seed germination.
- Cleared and graded areas exposed to seasonal rains or temporary irrigation.
- To vegetate swales and earthen berms.
- Areas not subject to heavy wear by construction equipment or high traffic.

CASQA
CALIFORNIA STORMWATER QUALITY ASSOCIATION

Limitations

- Availability of hydroseeding equipment may be limited just prior to the rainy season and prior to storms due to high demand.
- Hydraulic seed should be applied with hydraulic mulch or a stand-alone hydroseed application should be followed by one of the following:
    - Straw mulch (see Straw Mulch EC-6)
    - Rolled erosion control products (see Geotextiles and Mats EC-7)
    - Application of Compost Blanket (see Compost Blanket EC-14)

  Hydraulic seed may be used alone only on small flat surfaces when there is sufficient time in the season to ensure adequate vegetation establishment and coverage to provide adequate erosion control.
- Hydraulic seed without mulch does not provide immediate erosion control.
- Temporary seeding may not be appropriate for steep slopes (i.e., slopes readily prone to rill erosion or without sufficient topsoil).
- Temporary seeding may not be appropriate in dry periods without supplemental irrigation.
- Temporary vegetation may have to be removed before permanent vegetation is applied.
- Temporary vegetation may not be appropriate for short term inactivity (i.e., less than 3-6 months).
- Vegetation may not establish when hydroseed is applied to very compact soils.
- Mulch may inhibit germination when applied at high rates.
- This BMP consists of a mixture of several constituents (e.g., fibers/mulches, tackifiers, and other chemical constituents), some of which may be proprietary and may come pre-mixed by the manufacturer. The water quality impacts of these constituents are relatively unknown, and some may have water quality impacts due to their chemical makeup. Additionally, these constituents may require non-visible pollutant monitoring. Refer to specific chemical properties identified in the product's Safety Data Sheet (SDS), although, note that not all SDS's provide ecological information; products should be evaluated for project-specific implementation by the QSD. Refer to fact sheet EC-05, Soil Binders, for further guidance on selecting soil binders.

Implementation

In order to select appropriate hydraulic seed mixtures, an evaluation of site conditions should be performed with respect to:

- Soil conditions
- Site topography and exposure (sun/wind)
- Maintenance requirements
- Sensitive adjacent areas

- Season and climate
- Water availability
- Vegetation types
- Plans for permanent vegetation

The local office of the U.S.D.A. Natural Resources Conservation Service (NRCS), Resource Conservation Districts and Agricultural Extension Service can provide information on appropriate seed mixes.

The following steps should be followed for implementation:

- Where appropriate or feasible, soil should be prepared to receive the seed by disking or otherwise scarifying (See EC-15, Soil Preparation) the surface to eliminate crust, improve air and water infiltration and create a more favorable environment for germination and growth.
- Avoid use of hydraulic seed in areas where the BMP would be incompatible with future earthwork activities.
- Hydraulic seed can be applied using a multiple step or one step process.
  - In a multiple step process, hydraulic seed is applied first, followed by mulch or a Rolled Erosion Control Product (RECP).
  - In the one step process, hydraulic seed is applied with hydraulic mulch in a hydraulic matrix. When the one step process is used to apply the mixture of fiber, seed, etc., the seed rate should be increased to compensate for all seeds not having direct contact with the soil.
- All hydraulically seeded areas should have mulch, or alternate erosion control cover to keep seeds in place and to moderate soil moisture and temperature until the seeds germinate and grow.
- All seeds should be in conformance with the California State Seed Law of the Department of Agriculture. Each seed bag should be delivered to the site sealed and clearly marked as to species, purity, percent germination, dealer's guarantee, and dates of test. The container should be labeled to clearly reflect the amount of Pure Live Seed (PLS) contained. All legume seed should be pellet inoculated. Inoculant sources should be species specific and should be applied at a rate of 2 lb of inoculant per 100 lb seed.
- Commercial fertilizer should conform to the requirements of the California Food and Agricultural Code, which can be found at: https://www.cdfa.ca.gov/is/docs/Fertilizer_Law_and_Regs.pdf. Fertilizer should be pelleted or granular form.
- Follow up applications should be made as needed to cover areas of poor coverage or germination/vegetation establishment and to maintain adequate soil protection.
- Avoid over spray onto roads, sidewalks, drainage channels, existing vegetation, etc.
- Additional guidance on the comparison and selection of temporary slope stabilization methods is provided in Appendix B “Guidance on Selection of Temporary Slope Stabilization Techniques” of the CASQA Construction BMP Handbook.

Inspection and Maintenance

- BMPs must be inspected in accordance with General Permit requirements for the associated project type and risk level. It is recommended that at a minimum, BMPs be inspected weekly, prior to forecasted rain events, daily during extended rain events, and after the conclusion of rain events.
- Areas where erosion is evident should be repaired and BMPs re-applied as soon as possible. Care should be exercised to minimize the damage to protected areas while making repairs, as any area damaged will require re-application of BMPs.
- Where seeds fail to germinate, or they germinate and die, the area must be re-seeded, fertilized, and mulched within the planting season, using not less than half the original application rates.
- Irrigation systems, if applicable, should be inspected daily while in use to identify system malfunctions and line breaks. When line breaks are detected, the system must be shut down immediately and breaks repaired before the system is put back into operation.
- Irrigation systems should be inspected for complete coverage and adjusted as needed to maintain complete coverage.

References and Additional Resources

Construction Site Best Management Practices (BMPs) Manual CTSW-RT-24-425.11.1, California Department of Transportation (Caltrans), March 2024.

Guidance for Temporary Soil Stabilization, California Department of Transportation (Caltrans), July 2003.

Soil Stabilization BMP Research for Erosion and Sediment Controls: Cost Survey Technical Memorandum, State of California Department of Transportation (Caltrans), July 2007.

Geotextiles and Mats EC-7

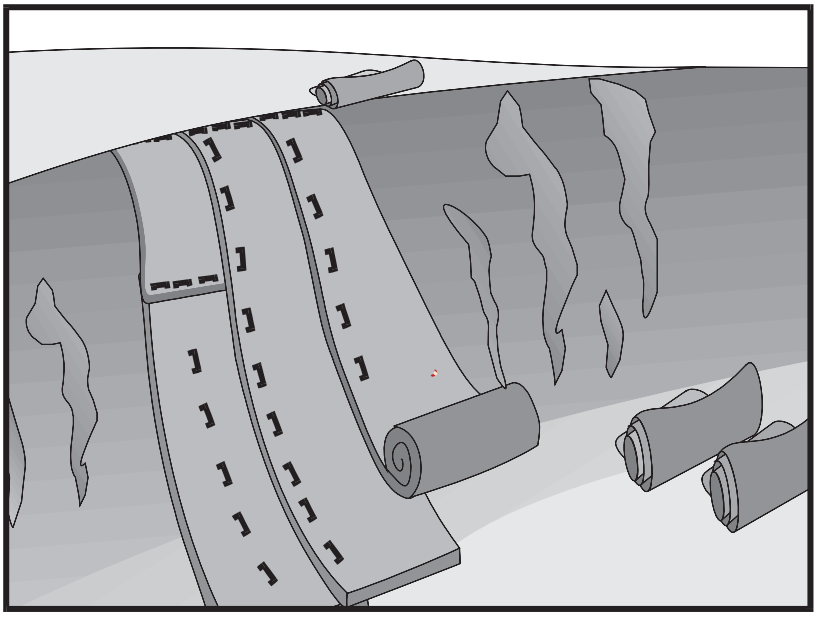

Categories

EC	Erosion Control	☑
SE	Sediment Control	
TC	Tracking Control	
WE	Wind Erosion Control	☒
NS	Non-Stormwater Management Control	
WM	Waste Management and Materials Pollution Control	

Legend:
☑ **Primary Category**
☒ **Secondary Category**

Targeted Constituents

Sediment	☑
Nutrients	
Trash	
Metals	
Bacteria	
Oil and Grease	
Organics	

Potential Alternatives

EC-3 Hydraulic Mulch

EC-4 Hydroseeding

Copyright 2026 by the California Stormwater Quality Association

Description and Purpose

Rolled Erosion Control Products (RECPs), also known as erosion control matting or blankets, can be made of natural or synthetic materials or a combination of the two. RECPs are used to cover the soil surface to reduce erosion from rainfall impact, hold soil in place, and absorb and hold moisture near the soil surface. Additionally, RECPs may be used to stabilize soils until vegetation is established or to reinforce non-woody surface vegetation.

Suitable Applications

RECPs are typically applied on slopes where erosion hazard is high, and vegetation will be slow to establish. Mattings are also used on stream banks, swales and other drainage channels where moving water at velocities between 3 ft/s and 6 ft/s are likely to cause scour and wash out new vegetation and in areas where the soil surface is disturbed and where existing vegetation has been removed. RECPs may also be used when seeding cannot occur (e.g., late season construction and/or the arrival of an early rain season). RECPs should be considered when the soils are fine grained and potentially erosive. RECPs should be considered in the following situations:

- Steep slopes, generally steeper than 3:1 (H:V).
- Long slopes.
- Slopes where the erosion potential is high.
- Slopes and disturbed soils where mulch must be anchored.

CASQA
CALIFORNIA STORMWATER QUALITY ASSOCIATION

- Disturbed areas where temporary cover is needed, or plants are slow to establish or will not establish.
- Channels with flows exceeding 3.3 ft/s.
- Channels to be vegetated.
- Stockpiles.
- Slopes adjacent to water bodies.

Limitations

- RECP installed costs are generally higher than other erosion control BMPs, limiting their use to areas where other BMPs are ineffective (e.g., channels, steep slopes).
- RECPs may delay seed germination, due to reduction in soil temperature and/or sunlight.
- RECPs are generally not suitable for excessively rocky sites or areas where the final vegetation will be mowed (since staples and netting can catch in mowers). If a staple or pin cannot be driven into the soil because the underlying soil is too hard or rocky, then an alternative BMP should be selected.
- If used for temporary erosion control, RECPs should be removed and disposed of prior to application of permanent soil stabilization measures.
- The use of plastic sheeting should be limited to covering stockpiles or very small graded areas for short periods of time (such as through one imminent storm event) until other measures, such as seeding and mulching, may be installed.
  - Plastic sheeting is easily vandalized, easily torn, photodegradable, and must be disposed of at a landfill.
  - Plastic sheeting results in 100% runoff, which may cause serious erosion problems in the areas receiving the increased flow.
- According to the State Water Board's *CGP Review, Issue #2*, only RECPs that either do not contain plastic netting or contain netting manufactured from 100% biodegradable non-plastic materials, such as jute, sisal, or coir fiber should be used due to plastic pollution and wildlife concerns. If a plastic-netted product is used for temporary stabilization, it must be promptly removed when no longer needed and removed or replaced with non-plastic netted RECPs for final stabilization.
- RECPs may have limitations based on soil type, slope gradient, or channel flow rate; consult the manufacturer for proper selection.
- Not suitable for areas that have foot traffic (tripping hazard) – e.g., pad areas around buildings under construction.
- RECPs that incorporate a plastic netting (e.g. straw blanket typically uses a plastic netting to hold the straw in place) may not be suitable near known wildlife habitat. Wildlife can become trapped in the plastic netting. As per State Water Board guidance, RECPs that

contain plastic netting are discouraged for temporary controls and are not acceptable alternatives for permanent controls. RECPs that do not contain plastic netting or contain netting manufactured from 100% biodegradable non-plastic materials such as jute, sisal, or coir fiber should be used.

- RECPs may have limitations in extremely windy climates; they are susceptible to wind damage and displacement. However, when RECPs are properly trenched at the top and bottom and stapled in accordance with the manufacturer's recommendations, problems with wind can be minimized.

Implementation

Material Selection

- Natural RECPs have been found to be effective where re-vegetation will be provided by re-seeding. The choice of material should be based on the size of area, side slopes, surface conditions such as hardness, moisture, weed growth, and availability of materials.

- Additional guidance on the comparison and selection of temporary slope stabilization methods is provided in Appendix B "Guidance on Selection of Temporary Slope Stabilization Techniques" of the CASQA Construction BMP Handbook.

- The following natural and synthetic RECPs are commonly used:

Geotextiles

- Material can be a woven or a non-woven polypropylene fabric with minimum thickness of 0.06 in., minimum width of 12 ft and should have minimum tensile strength of 150 lbs (warp), 80 lbs (fill) in conformance with the requirements in ASTM Designation: D 4632. The permittivity of the fabric should be approximately 0.07 sec^{-1} in conformance with the requirements in ASTM Designation: D4491. The fabric should have an ultraviolet (UV) stability of 70 percent in conformance with the requirements in ASTM designation: D4355. Geotextile blankets must be secured in place with wire staples or sandbags and by keying into tops of slopes to prevent infiltration of surface waters under geotextile. Staples should be made of minimum 11-gauge steel wire and should be U-shaped with 8 in. legs and 2 in. crown.

- Geotextiles may be reused if they are suitable for the use intended.

Plastic Covers

- Generally plastic sheeting should only be used as stockpile covering or for very small graded areas for short periods of time (such as through one imminent storm event). If plastic sheeting must be used, choose a plastic that will withstand photo degradation.

- Plastic sheeting should have a minimum thickness of 6 mils and must be keyed in at the top of slope (when used as a temporary slope protection) and firmly held in place with sandbags or other weights placed no more than 10 ft apart. Seams are typically taped or weighted down their entire length, and there should be at least a 12 in. to 24 in. overlap of all seams. Edges should be embedded a minimum of 6 in. in soil (when used as a temporary slope protection).

- All sheeting must be inspected periodically after installation and after significant rainstorms to check for erosion, undermining, and anchorage failure. Any failures must be repaired immediately. If washout or breakages occur, the material should be re-installed after repairing the damage to the slope.

Erosion Control Blankets/Mats

- Biodegradable RECPs are typically composed of jute fibers, curled wood fibers, straw, coconut fiber, or a combination of these materials. In order for an RECP to be considered 100% biodegradable, the netting, sewing or adhesive system that holds the biodegradable mulch fibers together must also be biodegradable. See typical installation details at the end of this fact sheet.

  - **Jute** is a natural fiber that is made into a yarn that is loosely woven into a biodegradable mesh. The performance of jute as a stand-alone RECP is low. Most other RECPs outperform jute as a temporary erosion control product and therefore jute is not commonly used. It is designed to be used in conjunction with vegetation. The material is supplied in rolled strips, which should be secured to the soil with U-shaped staples or stakes in accordance with manufacturers' recommendations.

  - **Excelsior** (curled wood fiber) blanket material should consist of machine produced mats of curled wood excelsior with 80 percent of the fiber 6 in. or longer. The excelsior blanket should be of consistent thickness. The wood fiber must be evenly distributed over the entire area of the blanket. The top surface of the blanket should be covered with a photodegradable extruded plastic mesh. The blanket should be smolder resistant without the use of chemical additives and should be non-toxic and non-injurious to plant and animal life. Excelsior blankets should be furnished in rolled strips, a minimum of 48 in. wide, and should have an average weight of 0.8 lb/yd^2, ±10 percent, at the time of manufacture. Excelsior blankets must be secured in place with wire staples. Staples should be made of minimum 11-gauge steel wire and should be U-shaped with 8 in. legs and 2 in. crown.

  - **Straw blanket** should be machine produced mats of straw with a lightweight biodegradable netting top layer. The straw should be attached to the netting with biodegradable thread or glue strips. The straw blanket should be of consistent thickness. The straw should be evenly distributed over the entire area of the blanket. Straw blanket should be furnished in rolled strips a minimum of 6.5 ft wide, a minimum of 80 ft long and a minimum of 0.5 lb/yd^2. Straw blankets must be secured in place with wire staples. Staples should be made of minimum 11-gauge steel wire and should be U-shaped with 8 in. legs and 2 in. crown.

  - **Wood fiber blanket** is composed of biodegradable fiber mulch with extruded plastic netting held together with adhesives. The material is designed to enhance re-vegetation. The material is furnished in rolled strips, which must be secured to the ground with U-shaped staples or stakes in accordance with manufacturers' recommendations.

  - **Coconut fiber blanket** should be a machine produced mat of 100 percent coconut fiber with biodegradable netting on the top and bottom. The coconut fiber should be attached to the netting with biodegradable thread or glue strips. The coconut fiber blanket should be of consistent thickness. The coconut fiber should be evenly distributed

over the entire area of the blanket. Coconut fiber blanket should be furnished in rolled strips with a minimum of 6.5 ft wide, a minimum of 80 ft. long and a minimum of 0.5 lb/yd^2. Coconut fiber blankets must be secured in place with wire staples. Staples should be made of minimum 11-gauge steel wire and should be U-shaped with 8 in. legs and 2 in. crown.

- **Coconut fiber mesh** is a thin permeable membrane made from coconut or corn fiber that is spun into a yarn and woven into a biodegradable mat. It is designed to be used in conjunction with vegetation and typically has longevity of several years. The material is supplied in rolled strips, which must be secured to the soil with U-shaped staples or stakes in accordance with manufacturers' recommendations.

- **Straw coconut fiber blanket** should be machine produced mats of 70 percent straw and 30 percent coconut fiber with a biodegradable netting top layer and a biodegradable bottom net. The straw and coconut fiber should be attached to the netting with biodegradable thread or glue strips. The straw coconut fiber blanket should be of consistent thickness. The straw and coconut fiber should be evenly distributed over the entire area of the blanket. Straw coconut fiber blanket should be furnished in rolled strips a minimum of 6.5 ft wide, a minimum of 80 ft long and a minimum of 0.5 lb/yd^2. Straw coconut fiber blankets must be secured in place with wire staples. Staples should be made of minimum 11-gauge steel wire and should be U-shaped with 8 in. legs and 2 in. crown.

- Non-biodegradable RECPs are typically composed of polypropylene, polyethylene, nylon or other synthetic fibers. In some cases, a combination of biodegradable and synthetic fibers is used to construct the RECP. Netting used to hold these fibers together is typically non-biodegradable as well. Only biodegradable RECPs can remain on a site applying for a Notice of Termination due to plastic pollution and wild life concerns (State Waterboard, 2016). RECPs containing plastic that are used on a site must be disposed of for final stabilization.

  - **Plastic netting** is a lightweight biaxially oriented netting designed for securing loose mulches like straw or paper to soil surfaces to establish vegetation. The netting is photodegradable. The netting is supplied in rolled strips, which must be secured with U-shaped staples or stakes in accordance with manufacturers' recommendations.

  - **Plastic mesh** is an open weave geotextile that is composed of an extruded synthetic fiber woven into a mesh with an opening size of less than ¼ in. It is used with re-vegetation or may be used to secure loose fiber such as straw to the ground. The material is supplied in rolled strips, which must be secured to the soil with U-shaped staples or stakes in accordance with manufacturers' recommendations.

  - **Synthetic fiber with netting** is a mat that is composed of durable synthetic fibers treated to resist chemicals and ultraviolet light. The mat is a dense, three-dimensional mesh of synthetic (typically polyolefin) fibers stitched between two polypropylene nets. The mats are designed to be re-vegetated and provide a permanent composite system of soil, roots, and geomatrix. The material is furnished in rolled strips, which must be secured with U-shaped staples or stakes in accordance with manufacturers' recommendations.

- **Bonded synthetic fibers** consist of a three-dimensional geometric nylon (or other synthetic) matting. Typically, it has more than 90 percent open area, which facilitates root growth. It's tough root reinforcing system anchors vegetation and protects against hydraulic lift and shear forces created by high volume discharges. It can be installed over prepared soil, followed by seeding into the mat. Once vegetated, it becomes an invisible composite system of soil, roots, and geomatrix. The material is furnished in rolled strips that must be secured with U-shaped staples or stakes in accordance with manufacturers' recommendations.

- **Combination synthetic and biodegradable RECPs** consist of biodegradable fibers, such as wood fiber or coconut fiber, with a heavy polypropylene net stitched to the top and a high strength continuous filament geomatrix or net stitched to the bottom. The material is designed to enhance re-vegetation. The material is furnished in rolled strips, which must be secured with U-shaped staples or stakes in accordance with manufacturers' recommendations.

Site Preparation

- Proper soil preparation is essential to ensure complete contact of the RECP with the soil. Soil Roughening is not recommended in areas where RECPs will be installed.
- Grade and shape the area of installation.
- Remove all rocks, clods, vegetation or other obstructions so that the installed blankets or mats will have complete, direct contact with the soil.
- Prepare seedbed by loosening 2 to 3 in. of topsoil.

Seeding/Planting

Seed the area before blanket installation for erosion control and re-vegetation. Seeding after mat installation is often specified for turf reinforcement application. When seeding prior to blanket installation, all areas disturbed during blanket installation must be re-seeded. Where soil filling is specified for turf reinforcement mats (TRMs), seed the matting and the entire disturbed area after installation and prior to filling the mat with soil.

Fertilize and seed in accordance with seeding specifications or other types of landscaping plans. The protective matting can be laid over areas where grass has been planted and the seedlings have emerged. Where vines or other ground covers are to be planted, lay the protective matting first and then plant through matting according to design of planting.

Check Slots

Check slots shall be installed as required by the manufacturer.

Laying and Securing Matting

- Before laying the matting, all check slots should be installed and the seedbed should be friable, made free from clods, rocks, and roots. The surface should be compacted and finished according to the requirements of the manufacturer's recommendations.

- Mechanical or manual lay down equipment should be capable of handling full rolls of fabric and laying the fabric smoothly without wrinkles or folds. The equipment should meet the fabric manufacturer's recommendations or equivalent standards.

Anchoring

- U-shaped wire staples, metal geotextile stake pins, or triangular wooden stakes can be used to anchor mats and blankets to the ground surface.
- Wire staples should be made of minimum 11-gauge steel wire and should be U-shaped with 8 in. legs and 2 in. crown.
- Metal stake pins should be 0.188 in. diameter steel with a 1.5 in. steel washer at the head of the pin, and 8 in. in length.
- Wire staples and metal stakes should be driven flush to the soil surface.

Installation on Slopes

Installation should be in accordance with the manufacturer's recommendations. In general, these will be as follows:

- Begin at the top of the slope and anchor the blanket in a 6 in. deep by 6 in. wide trench. Backfill trench and tamp earth firmly.
- Unroll blanket down slope in the direction of water flow.
- Overlap the edges of adjacent parallel rolls 2 to 3 in. and staple every 3 ft (or greater, per manufacturer's specifications).
- When blankets must be spliced, place blankets end over end (shingle style) with 6 in. overlap. Staple through overlapped area, approximately 12 in. apart.
- Lay blankets loosely and maintain direct contact with the soil. Do not stretch.
- Staple blankets sufficiently to anchor blanket and maintain contact with the soil. Staples should be placed down the center and staggered with the staples placed along the edges. Steep slopes, 1:1 (H:V) to 2:1 (H:V), require a minimum of 2 staples/yd^2. Moderate slopes, 2:1 (H:V) to 3:1 (H:V), require a minimum of 1 ½ staples/yd^2. Check manufacturer's specifications to determine if a higher density staple pattern is required.

Installation in Channels

Installation should be in accordance with the manufacturer's recommendations. In general, these will be as follows:

- Dig initial anchor trench 12 in. deep and 6 in. wide across the channel at the lower end of the project area.
- Excavate intermittent check slots, 6 in. deep and 6 in. wide across the channel at 25 to 30 ft intervals along the channels.

- Cut longitudinal channel anchor trenches 4 in. deep and 4 in. wide along each side of the installation to bury edges of matting, whenever possible extend matting 2 to 3 in. above the crest of the channel side slopes.
- Beginning at the downstream end and in the center of the channel, place the initial end of the first roll in the anchor trench and secure with fastening devices at 12 in. intervals. Note: matting will initially be upside down in anchor trench.
- In the same manner, position adjacent rolls in anchor trench, overlapping the preceding roll a minimum of 3 in.
- Secure these initial ends of mats with anchors at 12 in. intervals, backfill and compact soil.
- Unroll center strip of matting upstream. Stop at next check slot or terminal anchor trench. Unroll adjacent mats upstream in similar fashion, maintaining a 3 in. overlap.
- Fold and secure all rolls of matting snugly into all transverse check slots. Lay mat in the bottom of the slot then fold back against itself. Anchor through both layers of mat at 12 in. intervals, then backfill and compact soil. Continue rolling all mat widths upstream to the next check slot or terminal anchor trench.
- Alternate method for non-critical installations: Place two rows of anchors on 6 in. centers at 25 to 30 ft. intervals in lieu of excavated check slots.
- Staple shingled lap spliced ends a minimum of 12 in. apart on 12 in. intervals.
- Place edges of outside mats in previously excavated longitudinal slots; anchor using prescribed staple pattern, backfill, and compact soil.
- Anchor, fill, and compact upstream end of mat in a 12 in. by 6 in. terminal trench.
- Secure mat to ground surface using U-shaped wire staples, geotextile pins, or wooden stakes.
- Seed and fill turf reinforcement matting with soil, if specified.

Soil Filling (if specified for turf reinforcement mat (TRM))

Installation should be in accordance with the manufacturer's recommendations. Typical installation guidelines are as follows:

- After seeding, spread and lightly rake ½-3/4 inches of fine topsoil into the TRM apertures to completely fill TRM thickness. Use backside of rake or other flat implement.
- Alternatively, if allowed by product specifications, spread topsoil using lightweight loader, backhoe, or other power equipment. Avoid sharp turns with equipment.
- Always consult the manufacturer's recommendations for installation.
- Do not drive tracked or heavy equipment over mat.
- Avoid any traffic over matting if loose or wet soil conditions exist.

- Use shovels, rakes, or brooms for fine grading and touch up.
- Smooth out soil filling just exposing top netting of mat.

Temporary Soil Stabilization Removal

- Temporary soil stabilization removed from the site of the work must be disposed of if necessary.

Inspection and Maintenance

- RECPs must be inspected in accordance with General Permit requirements for the associated project type and risk level. It is recommended that at a minimum, BMPs be inspected weekly, prior to forecasted rain events, daily during extended rain events, and after the conclusion of rain events.
- Areas where erosion is evident shall be repaired and BMPs reapplied as soon as possible. Care should be exercised to minimize the damage to protected areas while making repairs, as any area damaged will require reapplication of BMPs.
- If washout or breakage occurs, re-install the material after repairing the damage to the slope or channel.
- Make sure matting is uniformly in contact with the soil.
- Check that all the lap joints are secure.
- Check that staples are flush with the ground.

References and Additional Resources

Construction Site Best Management Practices (BMPs) Manual CTSW-RT-24-425.11.1, California Department of Transportation (Caltrans), March 2024.

CGP Review #2, State Water Resources Control Board, 2014. Available online at: http://www.waterboards.ca.gov/water_issues/programs/stormwater/docs/training/cgp_review_issue2.pdf.

Erosion and Sediment Control Manual, Oregon Department of Environmental Quality, February 2005.

Erosion Control Pilot Study Report, State of California Department of Transportation (Caltrans), June 2000.

Guidance for Temporary Soil Stabilization, California Department of Transportation (Caltrans), July 2003.

Guides for Erosion and Sediment Controls in California, USDA Soils Conservation Service, January 1991.

National Management Measures to Control Nonpoint Source Pollution from Urban Areas, United States Environmental Protection Agency, 2002.

Stormwater Management of the Puget Sound Basin, Technical Manual, Publication #91-75, Washington State Department of Ecology, February 1992.

Water Quality Management Plan for The Lake Tahoe Region, Volume II, Handbook of Management Practices, Tahoe Regional Planning Agency, November 1988.

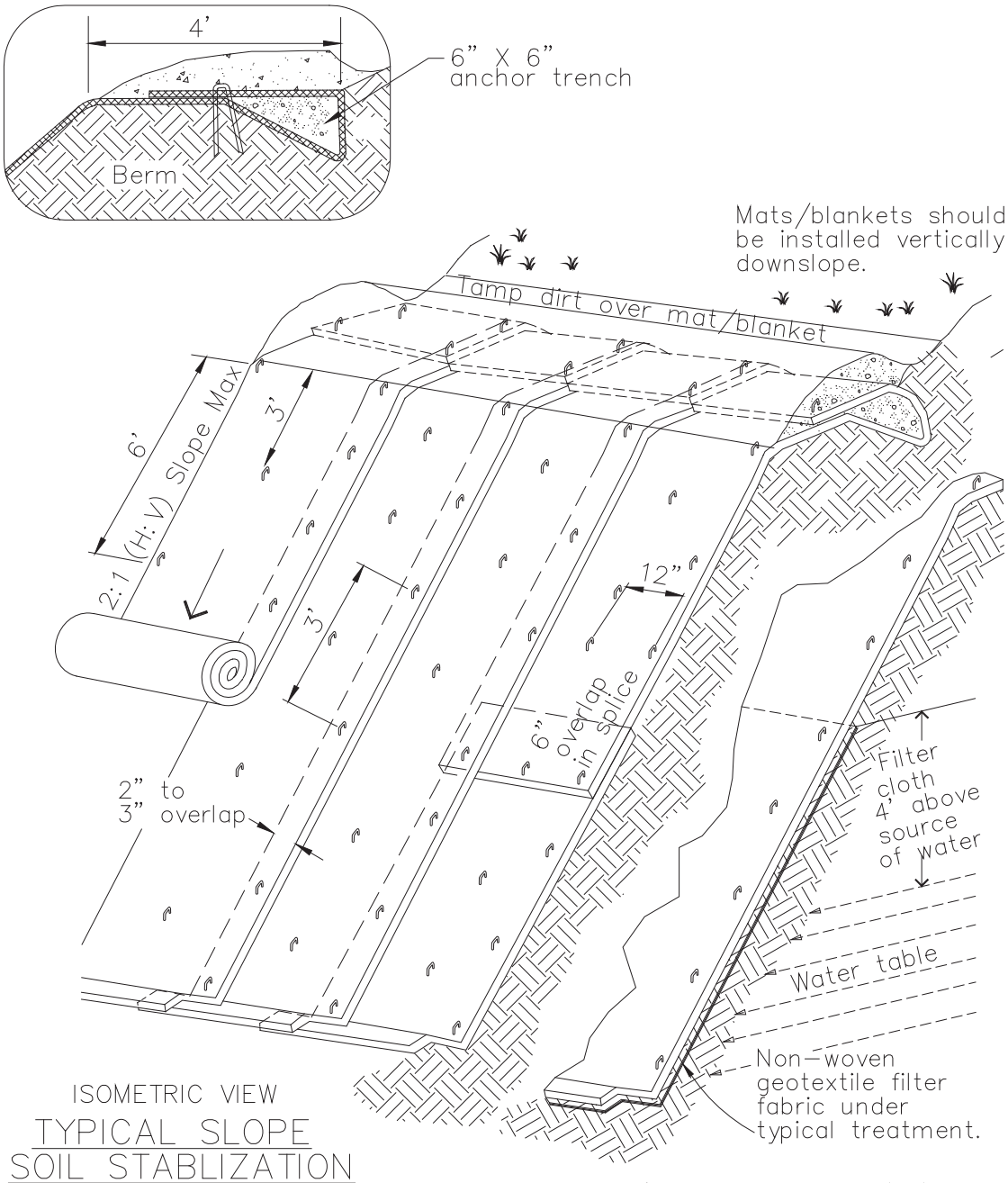

ISOMETRIC VIEW

TYPICAL SLOPE
SOIL STABLIZATION
NTS

WET SLOPE LINING
NTS

NOTES:

1. Slope surface shall be free of rocks, clods, sticks and grass. Mats/blankets shall have good soil contact.
2. Lay blankets loosely and stake or staple to maintain direct contact with the soil. Do not stretch.
3. Install per manufacturer's recommendations

TYPICAL INSTALLATION DETAIL

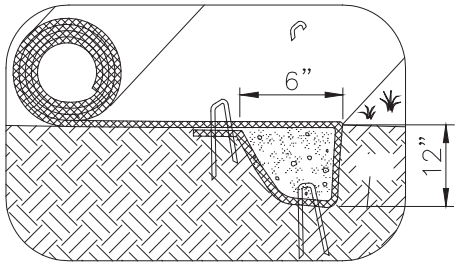

INITIAL CHANNEL ANCHOR TRENCH
NTS

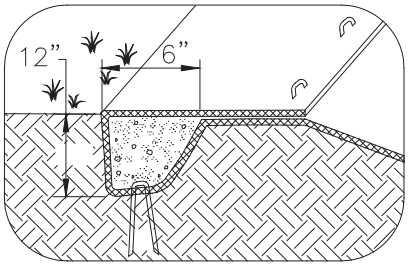

TERMINAL SLOPE AND CHANNEL ANCHOR TRENCH
NTS

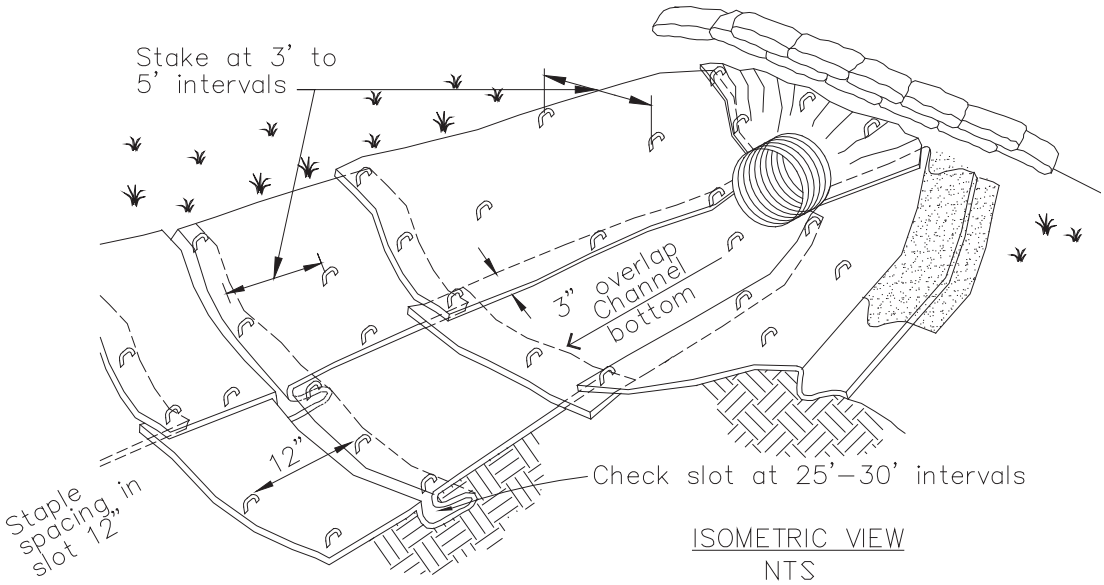

ISOMETRIC VIEW
NTS

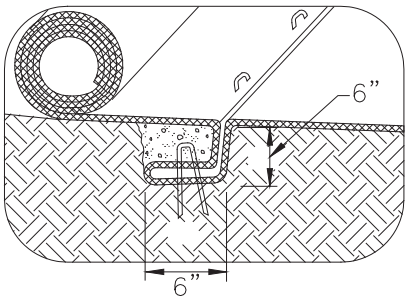

INTERMITTENT CHECK SLOT
NTS

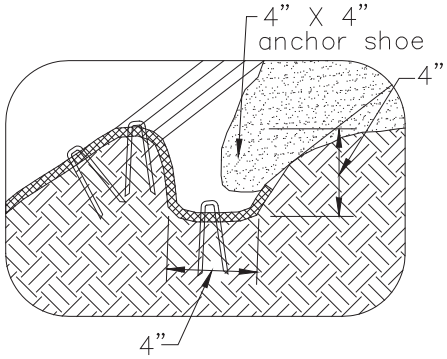

LONGITUDINAL ANCHOR TRENCH
NTS

NOTES:
1. Check slots to be constructed per manufacturers specifications.
2. Staking or stapling layout per manufacturers specifications.
3. Install per manufacturer's recommendations

TYPICAL INSTALLATION DETAIL

Compost Blanket EC-14



Description and Purpose

A compost blanket is applied to slopes and earth disturbed areas to prevent erosion, and in some cases, increase infiltration and/or establish vegetation. The compost blanket can be applied by hand, conveyor system, compost spreader, or pneumatic delivery (blower) system. The blanket thickness is determined from the slope steepness and anticipated precipitation. A compost blanket protects the soil surface from raindrop erosion, particularly rills and gullies that may form under other methods of erosion control.

A compost blanket, if properly installed, can be very successful at vegetation establishment, weed suppression and erosion control. The compost blanket comes into direct contact with the underlying soil, reducing rill formation. Furthermore, compost provides organic matter and nutrients important for vegetation growth. The compost blanket provides soil structure that allows water to infiltrate the soil surface and retain moisture, which also promotes seed germination and vegetation growth, in addition to reducing runoff.

Compost is typically derived from combinations of feedstocks, biosolids, leaf and yard trimmings, manure, wood, or mixed solid waste. Many types of compost are products of municipal recycle or "Green waste" programs. Compost is organic and biodegradable and can be left onsite. There are many types of compost with a variety of properties with specific functions, and accordingly, compost selection is an important design consideration in the application of this type of erosion control.

Categories

EC	Erosion Control	☑
SE	Sediment Control	
TC	Tracking Control	
WE	Wind Erosion Control	
NS	Non-Stormwater Management Control	
WM	Waste Management and Materials Pollution Control	

Legend:

☑ **Primary Category**

☒ **Secondary Category**

Targeted Constituents

Sediment	☑
Nutrients	
Trash	
Metals	
Bacteria	
Oil and Grease	
Organics	

Potential Alternatives

EC-3 Hydraulic Mulch

EC-4 Hydroseeding

EC-5 Soil Binders

EC-7 Geotextiles and Mats

EC-8 Wood Mulching

Copyright 2026 by the California Stormwater Quality Association

CASQA
CALIFORNIA STORMWATER QUALITY ASSOCIATION®

Suitable Applications

A compost blanket is appropriate for slopes and earth disturbed areas requiring protection until permanent stabilization is established. A compost blanket can also used in combination with temporary and/or permanent seeding strategies to enhance plant establishment. Examples include:

- Rough-graded areas that will remain inactive for longer than 14 days
- Soil stockpiles
- Slopes with exposed soil between existing vegetation such as trees or shrubs
- Slopes planted with live, container-grown vegetation
- Disturbed areas where plants are slow to develop

A compost blanket is typically used on slopes of 2:1 (H:V) or gentler. However, a compost blanket can be effective when applied to slopes as steep as 1:1 (H:V) with appropriate design considerations including slope length, blanket thickness, adding components such as a tackifier, or using compost blankets in conjunction with other techniques, such as compost socks and berms or fiber rolls.

Compost can be pre-seeded prior to application to the soil (recommended by the EPA for construction site stormwater runoff control) or seeded after the blanket has been installed. The compost medium can also remove pollutants in stormwater including heavy metals; oil and grease; and hydrocarbons (USEPA, 1998).

Limitations

- Compost can potentially leach nutrients (dissolved phosphorus and nitrogen) into runoff and potentially impact water quality. Compost should not be used directly upstream from nutrient impaired waterbodies (Adams et. al, 2008).
- Compost may also contain other undesirable constituents that are detrimental to water quality. Carefully consider the qualifications and experience of any compost producer/supplier.
- A compost blanket applied by hand is more time intensive and potentially costly. Using a pneumatic blower truck is the recommended cost-effective method of application.
- When blowers are used, the treatment areas should be within 300 ft of a road or surface capable of supporting trucks.
- Wind may limit application of compost and result in application to undesired locations.
- Compost blankets should not be applied in areas of concentrated flows.
- Steeper slopes may require additional blanket thickness and other stability measures such as using tackifiers or slope interruption devices (compost socks and berms, or fiber rolls). The same applies for sites with high precipitation totals or during the rainy season.

Implementation

- Additional guidance on the comparison and selection of temporary slope stabilization methods is provided in Appendix F of the Handbook.

Compost Materials

- California Compost Regulations (Title 14, California Code of Regulations, Division 7, Chapter 3.1, Article 7, Section 17868.3) define and require a quality of compost for application. Compost should comply with all physical and chemical requirements. Specific requirements are provided in Table 1 below, taken from Caltrans Standard Special Provision 10-1 (SSP 10-1), Erosion Control (Compost Blanket).

- The compost producer should be fully permitted as specified under the California Integrated Waste Management Board, Local Enforcement Agencies and any other State and Local Agencies that regulate Solid Waste Facilities. If exempt from State permitting requirements, the composting facility should certify that it follows guidelines and procedures for production of compost meeting the environmental health standards of Title 14, California Code of Regulations, Division 7, Chapter 3.1, Article 7.

- The compost producer should be a participant in United States Composting Council's Seal of Testing Assurance program.

- Compost moisture should be considered for composition quality and application purposes. A range of 30-50% is typical. Compost that is too dry is hard to apply and compost that is too wet is more difficult (and more expensive) to transport. For arid or semi-arid areas, or for application during the dry season, use compost with greater moisture content than areas with wetter climates. For wetter or more humid climates or for application during the wet season, drier composts can be used as the compost will absorb moisture from the ambient air.

- Organic content of the compost is also important and should range from 30 to 65% depending on site conditions.

- Compost should be high-quality mature compost. Immature compost can potentially leach nutrients.

- Compost should not be derived from mixed municipal solid waste and should be free of visible contaminants.

- Compost should not contain paint, petroleum products, pesticides or any other chemical residues harmful to animal life or plant growth. Metal concentrations in compost should not exceed the maximum metal concentrations listed under Title 14, California Code of Regulations, Division 7, Chapter 3.1, Section 17868.2.

- Compost should not possess objectionable odors.

- Compost should be weed free.

Table 1. Physical/Chemical Requirements of Compost
Reference - Caltrans SSP-10 Erosion Control Blanket (Compost)

Property	Test Method	Requirement
pH	*TMECC 04.11-A Elastomeric pH 1:5 Slurry Method pH Units	6.0–8.0
Soluble Salts	TMECC 04.10-A Electrical Conductivity 1:5 Slurry Method dS/m (mmhos/cm)	0-10.0
Moisture Content	TMECC 03.09-A Total Solids & Moisture at 70+/- 5 deg C % Wet Weight Basis	30-60
Organic Matter Content	TMECC 05.07-A Loss-On-Ignition Organic Matter Method (LOI) % Dry Weight Basis	30–65
Maturity	TMECC 05.05-A Germination and Vigor Seed Emergence Seedling Vigor % Relative to Positive Control	 80 or Above 80 or Above
Stability	TMECC 05.08-B Carbon Dioxide Evolution Rate mg CO_2-C/g OM per day	8 or below
Particle Size	TMECC 02.02-B Sample Sieving for Aggregate Size Classification % Dry Weight Basis	100% Passing, 3 inches 90-100% Passing, 1 inch 65-100% Passing, 3/4 inch 0 - 75% Passing, 1/4 inch Maximum length 6 inches
Pathogen	TMECC 07.01-B Fecal Coliform Bacteria < 1000 MPN/gram dry wt.	Pass
Pathogen	TMECC 07.01-B Salmonella < 3 MPN/4 grams dry wt.	Pass
Physical Contaminants	TMECC 02.02-C Man Made Inert Removal and Classification: Plastic, Glass and Metal % > 4mm fraction	Combined Total: < 1.0
Physical Contaminants	TMECC 02.02-C Man Made Inert Removal and Classification: Sharps (Sewing needles, straight pins and hypodermic needles) % > 4mm fraction	None Detected

*TMECC refers to "Test Methods for the Examination of Composting and Compost," published by the United States Department of Agriculture and the United States Compost Council (USCC).

Installation

- Prior to compost application, prepare the slope by removing loose rocks, roots, stumps, and other debris greater than 2” in diameter. Prepare the slope area surface by scarifying or track walking/roughening if necessary.
- Select method to apply the compost blanket. A pneumatic blower is most cost effective and most adaptive in applying compost to steep, rough terrain, and hard to reach locations.

- A compost blanket thickness of 1" to 4" should be applied to slopes of 2:1 (H:V) or gentler, based on site-specific conditions. Increase blanket thickness with increased slope steepness and/or during installation during the rainy season (for example, 2" to 3" should be used for a 3:1 slope, while 1" to 2" can be used for a 4:1 slope). Erosion control using a compost blanket is not recommended for slopes greater than 1:1 (H:V).
- For steeper slopes, tackifiers should be utilized and/or other stabilization techniques employed. For example, compost socks or berms can be installed at intervals over the compost blanket (in a similar manner as Fiber Rolls, SE-5).
- Compost socks or berms (or equivalent linear sediment control BMP) should be placed at the top and/or bottom of the slope for additional erosion control performance.
- For optimum vegetation establishment, a blanket thickness of 1" to 2" is recommended. If vegetation establishment is not the primary function of the compost blanket, a thicker blanket may be recommended based on slope or rainfall conditions.
- Evenly distribute compost on the soil surface to the desired blanket thickness (1/2" to 4" as calculated prior based on-site conditions and objectives). Even distribution is an important factor in preventing future rill and gully erosion.
- The compost blanket should extend 3 to 6 feet over the top of the shoulder of the slope. A compost sock or compost berm can be used at the top of the slope as an auxiliary technique to prevent runoff from flowing underneath the compost blanket.
- Use additional anchoring and erosion control BMPs in conjunction of the compost blanket as needed.

Inspection and Maintenance

- BMPs must be inspected in accordance with General Permit requirements for the associated project type and risk level. It is recommended that at a minimum, BMPs be inspected weekly, prior to forecasted rain events, daily during extended rain events, and after the conclusion of rain events.
- Areas where erosion is evident, another layer of compost should be reapplied as soon as possible. It may be necessary to install an additional type of stormwater BMP at the top of slope or as a slope interrupter to control flow, such as a fiber roll (SE-5) or compost sock (SE-11).
- Care should be exercised to minimize the damage to protected areas while making repairs, as any area damaged will require reapplication of BMPs.
- Limit or prohibit foot traffic to minimize damage to BMP or impede vegetation establishment.

References and Additional Resources

An Analysis of Composting as an Environmental Remediation Technology, U.S. Environmental Protection Agency (USEPA), Solid Waste and Emergency Response (5305W), EPA530-R-8-008, 1998.

Characteristics of Compost: Moisture Holding and Water Quality Improvement, Center for Research in Water Resources, Kirchoff, C., Malina, J., and Barrett, M., 2003.

Compost Utilization for Erosion Control, The University of Georgia College of Agricultural and Environmental Sciences, pubs.caes.uga.edu/caespubs/pubcd/B1200.htm, Faucette, B. and Risse, M., 2009.

Demonstration Project Using Yard Debris Compost for Erosion Control, Final Report, presented to Metropolitan Service District, W&H Pacific, 1993.

Erosion and Sediment Control Manual, Oregon Department of Environmental Quality, 2005.

Evaluation of Environmental Benefits and Impacts of Compost and Industry Standard Erosion and Sediment Controls Measures Used in Construction Activities, Dissertation, Institute of Ecology, University of Georgia, Faucette, B., 2004.

Filter Sock Presentation provided at Erosion, Sediment Control and Stormwater Management with Compost BMPs Workshop, U.S. Composting Council 13th Annual Conference and Trade Show, McCoy, S., 2005.

National Pollutant Discharge Elimination System (NPDES), Compost Blankets, U.S. Environmental Protection Agency (USEPA). http://cfpub.epa.gov/npdes/stormwater/menuofbmps/index.cfm?action=factsheet_results&view=specific&bmp=118, 2009.

Standard Special Provision 10-1, Erosion Control (Compost Blanket), California Department of Transportation (Caltrans). 2007 Update.

Standard Specifications for Transportation Materials and Methods of Sampling and Testing Designation M10-03, Compost for Erosion/Sediment Control (Compost Blankets), Provisional, American Association of State Highway Transportation Officials (AASHTO), 2003.

Stormwater Best Management Practices (BMPs) Field Trials of Erosion Control Compost in Reclamation of Rock Quarry Operations, Nonpoint Source Protection Program CWA §319(h), Texas Commission on Environmental Quality, Adams, T., McFarland, A., Hauck, L., Barrett, M., and Eck, B., 2008.

Silt Fence SE-1

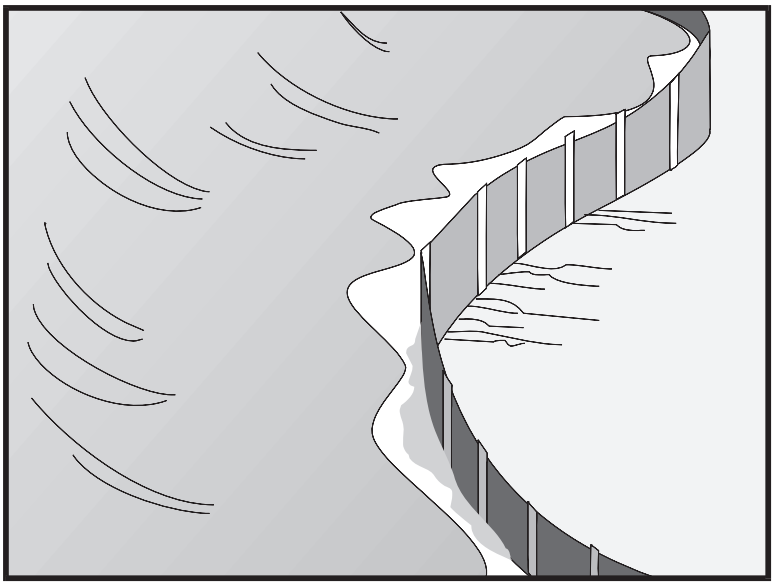

Categories

EC	Erosion Control	
SE	Sediment Control	☑
TC	Tracking Control	
WE	Wind Erosion Control	
NS	Non-Stormwater Management Control	
WM	Waste Management and Materials Pollution Control	

Legend:

☑ **Primary Category**

☒ **Secondary Category**

Description and Purpose

A silt fence is made of a woven geotextile that has been entrenched, attached to supporting poles, and sometimes backed by a plastic or wire mesh for support. The silt fence detains water, promoting sedimentation of coarse sediment behind the fence. Silt fence does not retain soil fine particles like clays or silts.

Suitable Applications

Silt fences are suitable for perimeter control, placed below areas where sheet flows discharge from the site. They could also be used as interior controls below disturbed areas where runoff may occur in the form of sheet and rill erosion and around inlets within disturbed areas (Storm Drain Inlet Protection, SE-10). Do not use silt fences in locations where the flow is concentrated. Always use silt fences in combination with erosion controls. Suitable applications include:

- At perimeter of a project (although they should not be installed up and down slopes).
- Below the toe or down slope of exposed and erodible slopes.
- Along streams and channels.
- Around temporary spoil areas and stockpiles.
- Around inlets.
- Below other small, cleared areas.

Targeted Constituents

Sediment (coarse sediment)	☑
Nutrients	
Trash	
Metals	
Bacteria	
Oil and Grease	
Organics	

Potential Alternatives

SE-5 Fiber Rolls

SE-6 Gravel Bag Berm SE-12 Manufactured Linear Sediment Controls

SE-13 Compost Socks and Berms

SE-14 Biofilter Bags

Copyright 2026 by the California Stormwater Quality Association

CASQA
CALIFORNIA STORMWATER QUALITY ASSOCIATION

Limitations

- Do not use in streams, channels, drain inlets, or anywhere flow is concentrated.
- Do not use in locations where ponded water may cause a flooding hazard.
- Do not use silt fence to divert water flows or place across any contour line.
- Improperly installed fences are subject to failure from undercutting, overtopping, or collapsing.
- Must be trenched and keyed in.
- According to the State Water Board's *CGP Review, Issue #2* (2014), avoid silt fences reinforced with metal or plastic mesh due to plastic pollution and wildlife concerns.
- Not intended for use as a substitute for Fiber Rolls (SE-5), when fiber rolls are being used as a slope interruption device.
- Do not use on slopes subject to creeping, slumping, or landslides.

Implementation

General

A silt fence is a temporary sediment barrier consisting of woven geotextile stretched across and attached to supporting posts, trenched-in, and, depending upon the strength of fabric used, supported with plastic or wire mesh fence. Silt fences trap coarse sediment by intercepting and detaining sediment-laden runoff from disturbed areas in order to promote sedimentation behind the fence.

The following layout and installation guidance can improve performance and are recommended:

- Use silt fence in combination with erosion controls up-slope in order to provide the most effective sediment control.
- Silt fence alone is not effective at reducing turbidity. (Barrett and Malina, 2004)
- Consider diverting sediment laden water to a temporary sediment basin or trap. (EPA, 2012)
- Use principally in areas where sheet flow occurs.
- Install along a level contour, so water does not pond more than 1.5 ft. at any point along the silt fence.
- Provide sufficient room for runoff to pond behind the fence and to allow sediment removal equipment to pass between the silt fence and toes of slopes or other obstructions. Provide about 1200 ft.^{2} of ponding area for every acre draining to the fence.
- Efficiency of silt fences is primarily dependent on the detention time of the runoff behind the control. (Barrett and Malina, 2004)

- The drainage area above any fence should not exceed a quarter of an acre. (Rule of Thumb - 100-feet of silt fence per 10,000 ft.^{2} of disturbed area.) (EPA, 2012)
- The maximum length of slope draining to any point along the silt fence should be 100 ft. per 1 ft. of silt fence.
- Turn the ends of the filter fence uphill to prevent stormwater from flowing around the fence.
- Leave an undisturbed or stabilized area immediately down slope from the fence where feasible.
- Maintain silt fences until the disturbed area draining to the silt fence is permanently stabilized, after which, remove and properly dispose of the silt fence fabric and posts.
- J-hooks, which have ends turning up the slope to break up long runs of fence and provide multiple storage areas that work like mini-retention areas, may be used to increase the effectiveness of silt fence.
- Be aware of local regulations regarding the type and installation requirements of silt fence, which may differ from those presented in this fact sheet.

Design and Layout

In areas where high winds are anticipated, support the silt fence by a plastic or wire mesh. The geotextile fabric of the silt fence should contain ultraviolet inhibitors and stabilizers to provide longevity equivalent to the project life or replacement schedule.

- Layout in accordance with the attached figures.
- For slopes that contain a high number of rocks or large dirt clods that tend to dislodge, it may be necessary to protect silt fence from rocks (e.g., rockfall netting) ensure the integrity of the silt fence installation.

Standard vs. Heavy Duty Silt Fence

Standard Silt Fence

- Generally applicable in cases where the area draining to fence produces moderate sediment loads.

Heavy Duty Silt Fence

- Heavy duty silt fence usually has one or more of the following characteristics, not possessed by standard silt fence.
  - Fabric is reinforced with wire backing or additional support.
  - Posts are spaced closer than pre-manufactured, standard silt fence products.
- Use is generally limited to areas affected by high winds.
- Area draining to fence produces moderate sediment loads.

Materials

Standard Silt Fence

- Silt fence material should be woven geotextile with a minimum width of 36 in. The fabric should conform to the requirements in ASTM designation D6461.

- Wooden stakes should be commercial quality lumber of the size and shape shown on the plans. Each stake should be free from decay, splits, or cracks longer than the thickness of the stake or other defects that would weaken the stakes and cause the stakes to be structurally unsuitable.

- Staples used to fasten the fence fabric to the stakes should be not less than 1 in. long and should be fabricated from 15-gauge or heavier wire.

- The wire used to fasten the tops of the stakes together when joining two sections of fence should be 9 gauge or heavier wire. Galvanizing of the fastening wire is not required.

Heavy-Duty Silt Fence

- Some silt fence has a wire backing to provide additional support, and there are products that may use prefabricated plastic holders for the silt fence and use metal posts instead of wood stakes.

Installation Guidelines – Traditional Method

Silt fences are to be constructed on a level contour. Sufficient area should exist behind the fence for ponding to occur without flooding or overtopping the fence.

- Excavate a trench approximately 6 in. wide and 6 in. deep along the line of the proposed silt fence (trenches should not be excavated wider or deeper than necessary for proper silt fence installation).

- Key-in the bottom of the silt fence a minimum of 12 in.

- Space posts a maximum of 6 ft. apart and driven securely into the ground a minimum of 18 in. or 12 in. below the bottom of the trench.

- When standard strength geotextile is used, securely fasten a plastic or wire mesh support fence to the upslope side of posts using heavy–duty wire staples at least 1 in. long. Extend the mesh into the trench.

- When extra-strength geotextile and closer post spacing are used, the mesh support fence may be eliminated.

- Purchase and cut woven geotextile in a long roll, then cut to the length of the barrier. When joints are necessary, splice geotextile together only at a support post, with a minimum 6 in. overlap and both ends securely fastened to the post.

- Backfill and compact the trench with native material.

- Construct the length of each reach so that the change in base elevation along the reach does not exceed 1/3 the height of the barrier; in no case should the reach exceed 500 ft.

- Cross barriers should be a minimum of 1/3 and a maximum of ½ the height of the linear barrier.

- See typical installation details at the end of this fact sheet.

Installation Guidelines - Static Slicing Method

- Static Slicing is defined as insertion of a narrow blade pulled behind a tractor, similar to a plow blade, at least 10 in. into the soil while at the same time pulling silt geotextile fabric into the ground through the opening created by the blade to the depth of the blade. Once the geotextile is installed, the soil is compacted using tractor tires.
- This method will not work with pre-fabricated or wire backed silt fence.
- Benefits:
    - Ease of installation (most often done with a 2-person crew).
    - Minimal soil disturbance.
    - Better level of compaction along fence, less susceptible to undercutting
    - Uniform installation.
- Limitations:
    - Does not work in shallow or rocky soils.
    - Complete removal of geotextile material after use is difficult.
    - Be cautious when digging near potential underground utilities.

Inspection and Maintenance

- BMPs must be inspected in accordance with General Permit requirements for the associated project type and risk level. It is recommended that at a minimum, BMPs be inspected weekly, prior to forecasted rain events, daily during extended rain events, and after the conclusion of rain events.
- Repair undercut silt fences.
- Repair or replace split, torn, slumping, or weathered fabric. The lifespan of silt fence fabric is generally 5 to 8 months.
- Remove silt fences that are damaged and become unsuitable for the intended purpose and replace with new silt fence barriers. Dispose of the damaged materials.
- Periodically remove sediment that accumulates in the BMP in order to maintain BMP effectiveness. Remove sediment when the sediment accumulation reaches 1/3 of the barrier height.
- Leave silt fences in place until the upgradient area is permanently stabilized. Until then, the regularly inspect and maintain the silt fence.
- Remove silt fence when upgradient areas are stabilized. Fill and compact post holes and anchor trench, remove sediment accumulation, grade fence alignment to blend with adjacent ground, and stabilize disturbed area.

References and Additional Resources

Construction Site Best Management Practices (BMPs) Manual CTSW-RT-24-425.11.1, California Department of Transportation (Caltrans), March 2024.

CGP Review #2, State Water Resources Control Board, 2014. Available online at: http://www.waterboards.ca.gov/water_issues/programs/stormwater/docs/training/cgp_review_issue2.pdf.

Manual of Standards of Erosion and Sediment Control Measures, Association of Bay Area Governments, May 1995.

Monitoring Data on Effectiveness of Sediment Control Techniques, Proceedings of World Water and Environmental Resources Congress, Barrett M., and Malina J. 2004.

National Management Measures to Control Nonpoint Source Pollution from Urban Areas, United States Environmental Protection Agency, 2002.

Proposed Guidance Specifying Management Measures for Sources of Nonpoint Pollution in Coastal Waters, Work Group-Working Paper, USEPA, April 1992.

Sedimentation and Erosion Control Practices, and Inventory of Current Practices (Draft), USEPA, 1990.

Southeastern Wisconsin Regional Planning Commission (SWRPC). Costs of Urban Nonpoint Source Water Pollution Control Measures. Technical Report No. 31. Southeastern Wisconsin Regional Planning Commission, Waukesha, WI. 1991.

Stormwater Management Manual for The Puget Sound Basin, Washington State Department of Ecology, Public Review Draft, 1991.

U.S. Environmental Protection Agency (USEPA). Stormwater Best Management Practices: Silt Fences. U.S. Environmental Protection Agency, Office of Water, Washington, DC, 2012.

U.S. Environmental Protection Agency (USEPA). Stormwater Management for Industrial Activities: Developing Pollution Prevention Plans and Best Management Practices. U.S. Environmental Protection Agency, Office of Water, Washington, DC, 1992.

Water Quality Management Plan for the Lake Tahoe Region, Volume II, Handbook of Management Practices, Tahoe Regional Planning Agency, November 1988.

Soil Stabilization BMP Research for Erosion and Sediment Controls: Cost Survey Technical Memorandum, State of California Department of Transportation (Caltrans), July 2007.

Erosion and Sediment Control Manual, Oregon Department of Environmental Quality, February 2005.

Silt Fence SE-1

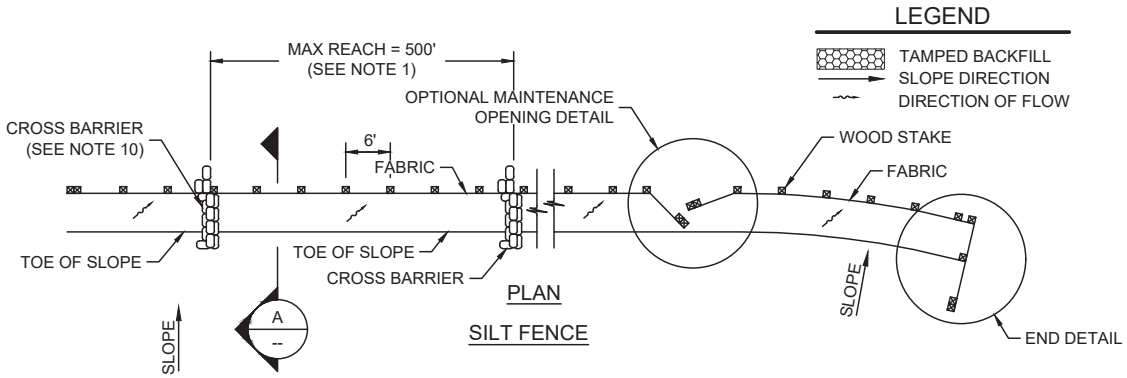

NOTES:
1. Construct the length of each reach so that the change in base elevation along the reach does not exceed 1/3 the height of the linear barrier. In no case shall the reach length exceed 500'.
2. The last 6'-0" of fence shall be turned upslope.
3. Stake dimensions are nominal.
4. Dimension may vary to fit field condition.
5. Stakes shall be spaced at 6'-0" maximum and shall be positioned on the downstream side of fence.
6. Stakes to overlap and fence fabric to fold around each stake one full turn. Secure fabric to stake with 4 staples.
7. Stakes shall be driven tightly together to prevent potential flow-through of sediment at the joint. The tops of the stakes shall be secured with wire.
8. For the end stake, fence fabric shall be folded around two stakes one full turn and secured with 4 staples.
9. Minimum 4 staples per stake. Dimensions shown are typical.
10. Cross barriers shall be a minimum of 1/3 and a maximum of 1/2 the height of the linear barrier.
11. Maintenance openings shall be constructed in a manner to ensure sediment remains behind silt fence.
12. Joining sections shall not be placed at sump locations.
13. Sandbag rows and layers shall be offset to eliminate gaps.
14. Add 3-4 bags to cross barrier on downgradient side of silt fence as needed to prevent bypass or undermining and as allowable based on site limits of disturbance.

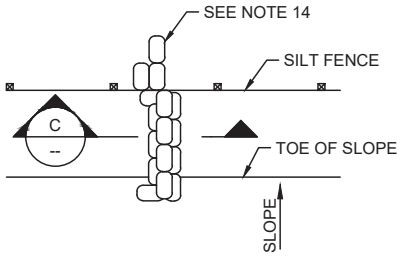

CROSS BARRIER DETAIL

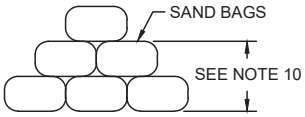

SECTION C-C

Silt Fence SE-1

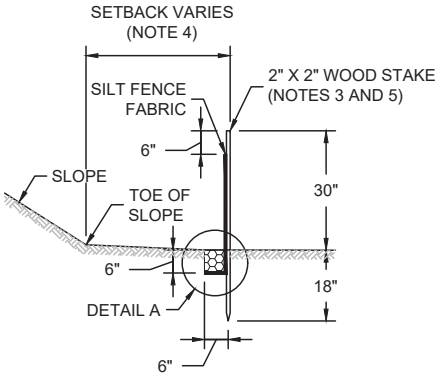

SECTION A-A

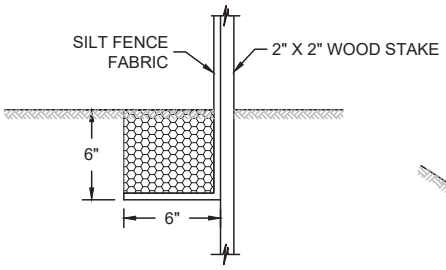

DETAIL A

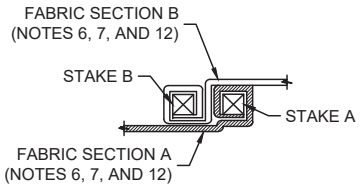

JOINING SECTION DETAIL
(TOP VIEW)

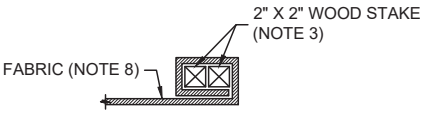

END STAKE DETAIL
(TOP VIEW)

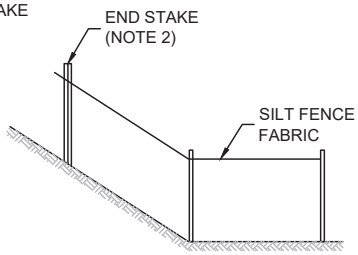

END DETAIL

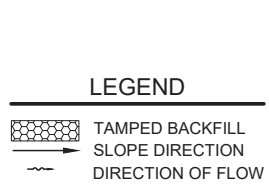

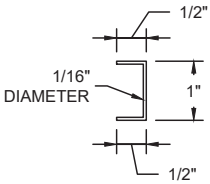

STAPLE DETAIL
(NOTE 9)

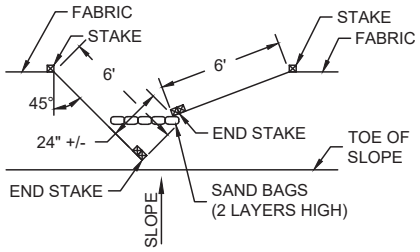

OPTIONAL MAINTENANCE OPENING DETAIL
(NOTE 11)

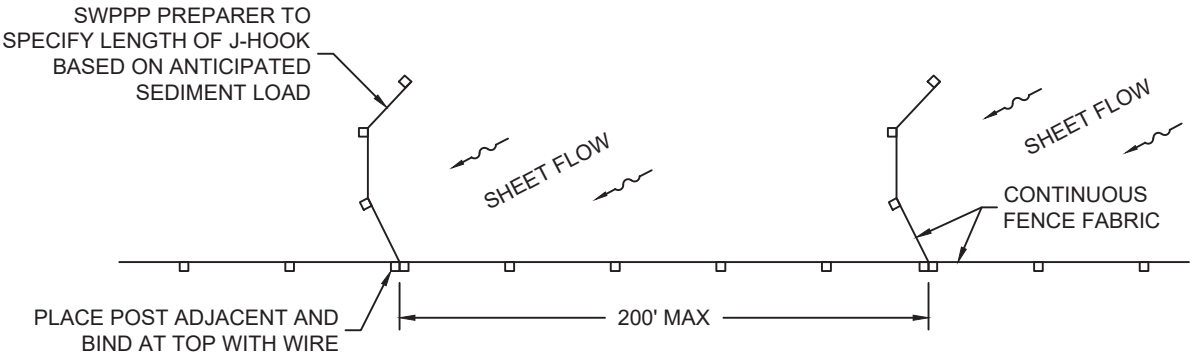
SWPPP PREPARER TO
SPECIFY LENGTH OF J-HOOK
BASED ON ANTICIPATED
SEDIMENT LOAD
SHEET FLOW
SHEET FLOW
CONTINUOUS
FENCE FABRIC
PLACE POST ADJACENT AND
BIND AT TOP WITH WIRE
200' MAX

PLAN

J-HOOK

Fiber Rolls SE-5

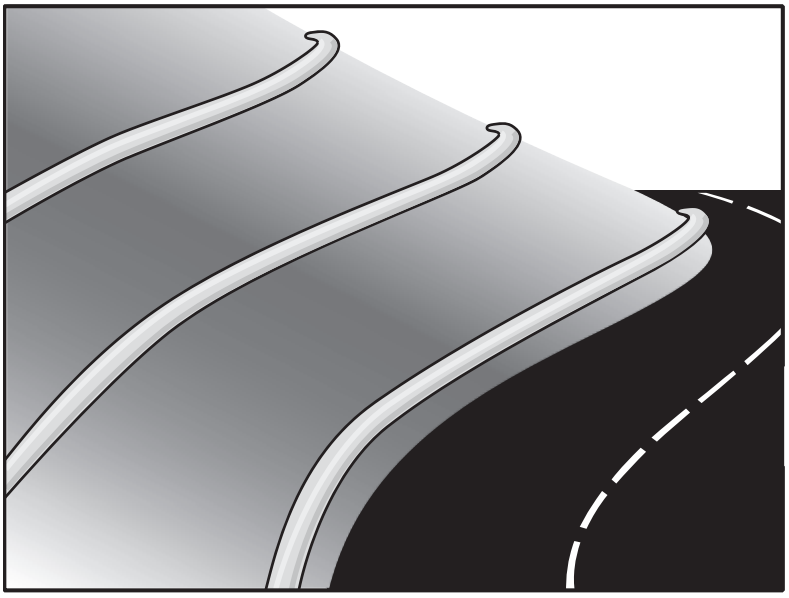

Categories

EC	Erosion Control	☒
SE	Sediment Control	☑
TC	Tracking Control	
WE	Wind Erosion Control	
NS	Non-Stormwater Management Control	
WM	Waste Management and Materials Pollution Control	

Legend:
☑ **Primary Category**
☒ **Secondary Category**

Targeted Constituents

Sediment	☑
Nutrients	
Trash	
Metals	
Bacteria	
Oil and Grease	
Organics	

Potential Alternatives

SE-1 Silt Fence
SE-6 Gravel Bag Berm
SE-8 Sandbag Barrier
SE-12 Manufactured Linear Sediment Controls
SE-13 Compost Socks and Berms
SE-14 Biofilter Bags

Copyright 2026 by the California Stormwater Quality Association

Description and Purpose

A fiber roll (also known as a wattle or log) consists of straw, coir, curled wood fiber, or other biodegradable materials bound into a tight tubular roll wrapped by netting. Additionally, gravel core fiber rolls are available, which contain an imbedded ballast material such as gravel or sand for additional weight, when staking the rolls are not feasible (such as use as inlet protection).

When fiber rolls are placed at the top, toe, and on the face of slopes along the contours, fiber rolls intercept runoff, reduce flow velocity, release runoff as sheet flow, and provide sediment removal from the runoff (through sedimentation). By interrupting the length of a slope, fiber rolls can also reduce sheet and rill erosion until vegetation is established.

Suitable Applications

Fiber rolls may be suitable:

- Along the top, toe, face, and at grade breaks of exposed and erodible slopes to shorten slope length and spread runoff as sheet flow.
- At the end of a downward slope where it transitions to a steeper slope.
- Along the perimeter of a project.
- As check dams in unlined ditches with minimal grade.
- Down-slope of exposed soil areas.

- At operational storm drains as a form of inlet protection.
- Around temporary stockpiles.

Limitations

- Fiber rolls are to be used in conjunction with erosion control, such as hydroseed, mulch, rolled erosion control products (RECPs), etc.
- Only biodegradable fiber rolls containing no plastic can remain on a site when applying for a Notice of Termination (NOT) due to plastic pollution and wildlife concerns. There may be further limitations on the use of plastic wrapped fiber rolls in wildlife sensitive areas. Fiber rolls containing plastic must be removed and disposed of prior to final stabilization.
- Do not install fiber rolls in high traffic areas where vehicles and equipment will displace or damage them.
- Do not use fiber rolls on paved surfaces where they cannot be staked and trenched in. Only gravel core rolls may be effective in this situation. See Gravel Bags (SE-6), Manufactured Linear Sediment Controls (SE-12), Compost Socks and Berms (SE-13), and Biofilter Bags (SE-14) for situations where staking or trenching is not possible.
- Do not use fiber rolls on slopes subject to creep, slumping, or landslides.
- Improper installation of a fiber roll such as not being trenched in, not staked appropriately, or not sufficiently overlapping at the ends, may cause undercutting and increased erosion.
- Fiber rolls installed by the Type 1 method are not effective unless trenched in and staked. If not properly staked and trenched in, fiber rolls will not work as intended and could be transported by high flows.
- Fiber rolls installed by the Type 2 method are not effective unless staked. If not properly staked in, fiber rolls will not work as intended and could be transported by high flows.
- Not intended for use in concentrated flows.
- Not intended to contain stormwater. See Sediment Basin (SE-2) or Sediment Trap (SE-3) for stormwater containment BMPs.
- Difficult to move once saturated.
- Difficult to repair when a small section of the fiber roll is damaged. Replacement of the entire fiber roll or installation of an additional fiber roll adjacent to the damage is often required.
- Fiber rolls are susceptible to damage from wildlife.
- Fiber rolls have a limited sediment capture zone.
- Fiber rolls typically function for 12-24 months, depending upon local conditions, roll material, and installation method. For example, the Type 2 installation method may last longer than the Type 1 installation method because the fiber roll is not penetrated.

- Fiber rolls that come manufactured containing polyacrylamide (PAM), a flocculating agent within the roll, are considered passive treatment technologies and are subject to additional requirements, see Passive Treatment (SE-15).

Implementation

Fiber Roll Materials

- Fiber rolls are to be prefabricated.
- Fiber rolls are made from weed-free rice straw, flax, curled wood fiber, or coir bound into a tight tubular roll by netting or wrap (see Limitations above regarding plastic netting).
- Typical fiber rolls vary in diameter from 6 in. to 20 in. Larger diameter rolls are available as well. The larger the roll diameter, the higher the sediment retention capacity.
- Typical fiber rolls lengths are 4, 10, 20 and 25 ft., although other lengths may be available.

Installation

- Locate fiber rolls on level contours spaced as follows:
  - Slope inclination between 20:1 and 4:1 -20 (H:V): Place fibers rolls at a maximum interval of 35 ft.
  - Slope inclination of 4:1 (H:V): Place fiber rolls at a maximum interval of 20 ft.
  - Slope inclination between 4:1 and 2:1 (H:V): Place fiber rolls at a maximum interval of 15 ft. (a closer spacing is more effective).
  - Slope inclination 2:1 (H:V) or greater: Place fiber rolls at a maximum interval of 10 ft. (a closer spacing is more effective).
- It is critical that fiber rolls are installed perpendicular to water flow and parallel to the slope contour.
- Prepare the slope before beginning installation.
- Dig small trenches across the slope on the contour. The trench depth is to be ¼ to 1/3 of the thickness of the roll, and the width is to be equal to the roll diameter, in order to provide area to backfill the trench.
- Use wood stakes with a nominal classification of 0.75 by 0.75 in. and minimum length of 24 in.
- For Type 1 installations:
  - Place in a trench that is from 2 to 4 inches deep.
  - Fasten with wood stakes every 4 feet along the length of the fiber roll.
  - Fasten the ends of the fiber roll by placing a stake 6 inches from the end of the roll.

- Drive the stakes into the soil so the top of the stake is less than 2 inches above the top of the fiber roll.

- For Type 2 installations (Caltrans, 2024):
  - Trenching in the fiber rolls is optional.
  - J-hook the ends of the fiber roll up-slope to prevent runoff from going around the fiber roll.
  - Drive stakes along alternating sides of each fiber roll, spaced 2 ft. apart. Stakes are to alternate between upslope and downslope of the fiber roll.
  - Lace the rope tightly around the stakes and over the fiber roll. Knot the rope at each stake.
  - Tighten the fiber roll to the surface of the slope by driving the stakes further into the soil.
- If more than one fiber roll is placed in a row, the rolls should overlap, not abut at the ends. Stagger overlapping joints in adjacent rows by 5 to 10 feet.
- See typical fiber roll installation details at the end of this fact sheet.

Removal

- Fiber rolls can be left in place or be removed depending on the type of fiber roll and its application (temporary vs. permanent installation).
- For temporary installations, only remove fiber rolls when upgradient areas are stabilized per General Permit requirements, and/or pollutant sources are no longer present. Remove fiber rolls before vegetation becomes too mature so that the removal process does not disturb more soil and vegetation than is necessary.
- For permanent installations for final stabilization, fiber rolls encased with plastic netting or containing any plastic material are to be removed from the site. If a fiber roll is to be left in place as part of a final stabilization design, the fiber roll must be non-plastic, made of plant-based materials (e.g., burlap-wrapped, coconut jute netting, and any other plant-based netting), and fully biodegradable.
- Fiber rolls can be an effective component of a final stabilization system, if all components of the fiber rolls are plant-based, fully biodegradable, and the fiber rolls are coupled with fully biodegradable effective erosion control measures (hydroseeding, RECPs, etc.) properly applied/installed per manufacturer's specifications and/or per the current CASQA BMP Fact Sheets. Removal of fiber rolls that are used as part of a final stabilization system can result in greater disturbance; therefore, during the BMP planning phase, only specify fiber rolls wrapped in non-plastic fully biodegradable materials for areas where fiber rolls will be used on final slopes.

Inspection and Maintenance

- BMPs are to be inspected in accordance with General Permit requirements for the associated project type and risk level. It is recommended that BMPs be inspected weekly at a minimum and prior to forecasted rain events, daily during extended rain events, and after the conclusion of rain events.
- Repair/replace split, torn, unraveling, or slumping fiber rolls as needed.
- Replace fiber rolls when they are disintegrated, flattened, and no longer effective.
- If construction activities or access to a work area are impaired by a fiber roll, move the fiber roll to avoid its damage or disintegration. Reinstall the fiber roll once active work is complete.
- If a fiber roll is used as a sediment capture device, or as an erosion control device to maintain sheet flows, periodically remove sediment that accumulates upgradient of the fiber roll to maintain BMP effectiveness. Remove sediment when sediment accumulation reaches one-third of the height of the fiber roll.
- If fiber rolls are used for erosion control, such as in a check dam, sediment removal may not be required as long as the system continues to control the grade. Sediment control BMPs will be implemented in conjunction with this type of application.
- Repair any undercutting, rills, and gullies promptly.

References and Additional Resources

Construction Site Best Management Practices (BMPs) Manual, CTSW-RT-24-425-11.1, Section 4, Fiber Rolls SC-5, California Department of Transportation (Caltrans), March 2024.

Construction Stormwater Program website, State Water Resources Control Board, online at: https://www.waterboards.ca.gov/water_issues/programs/stormwater/construction.html

Order 2022-0057-DWQ, NPDES General Permit No. CAS000002: National Pollutant Discharge Elimination System (NDPES) General Permit for Stormwater Discharges Associated with Construction and Land Disturbance Activities (General Permit), California State Water Resources Control Board (State Water Board), September 2022.

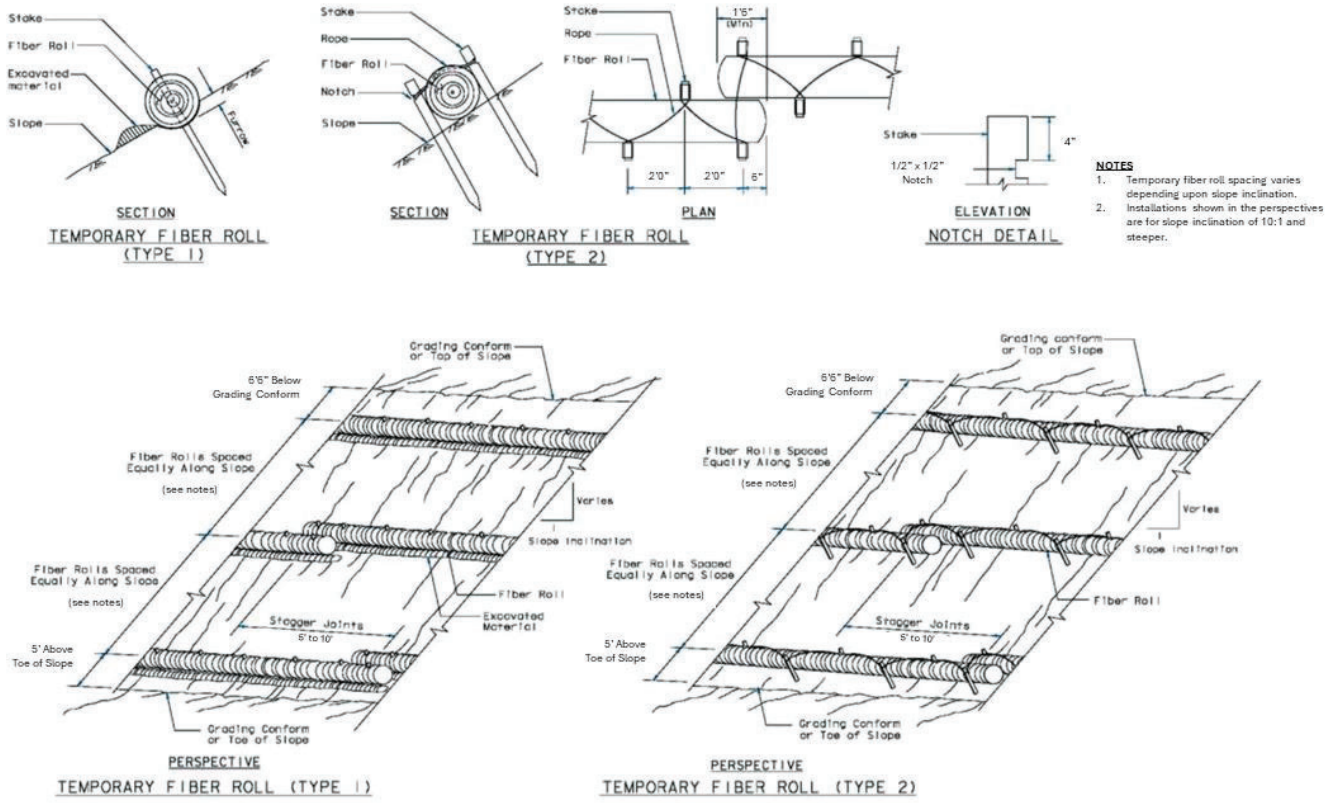

Reference: Construction Site Best Management Practices (BMPs) Manual, CTSW-RT-24-425-11.1, Section 4, Fiber Rolls SC-5, California Department of Transportation (Caltrans), March 2024.

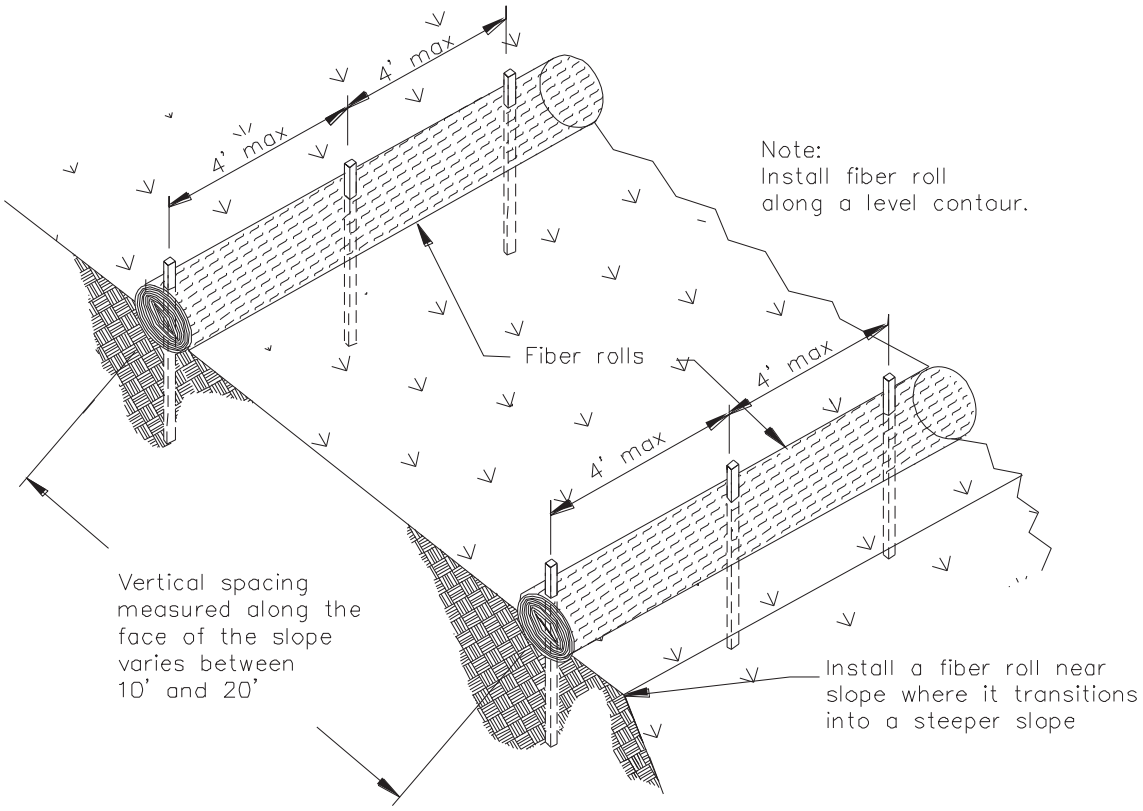

TYPICAL FIBER ROLL INSTALLATION
N.T.S.

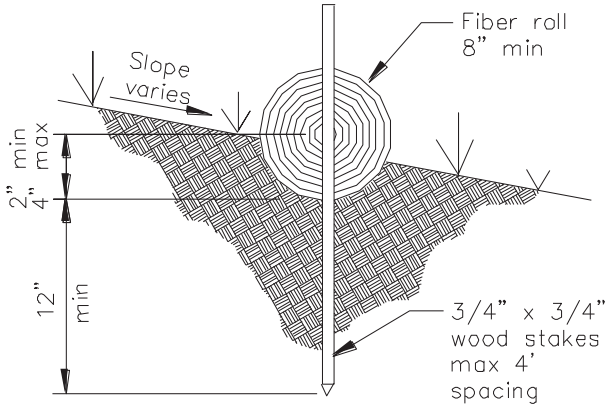

ENTRENCHMENT DETAIL
N.T.S.

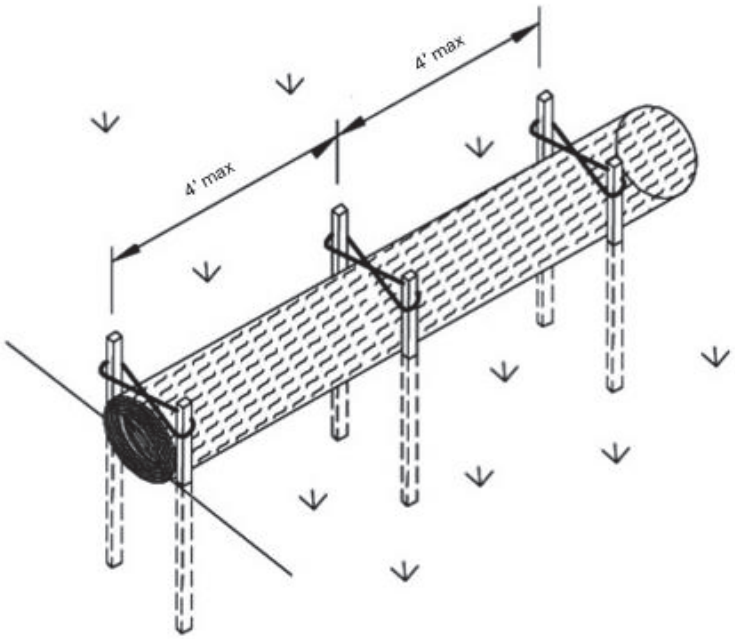

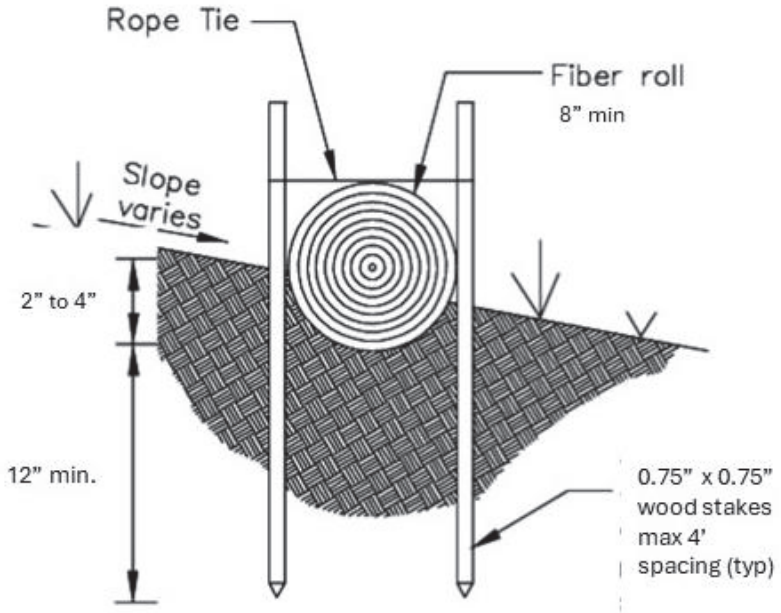

OPTIONAL ENTRENCHMENT DETAIL

N.T.S.

Reference: Construction Site Best Management Practices (BMPs) Manual, CTSW-RT-24-425-11.1, Section 4, Fiber Rolls SC-5, California Department of Transportation (Caltrans), March 2024.

Gravel Bag Berm SE-6

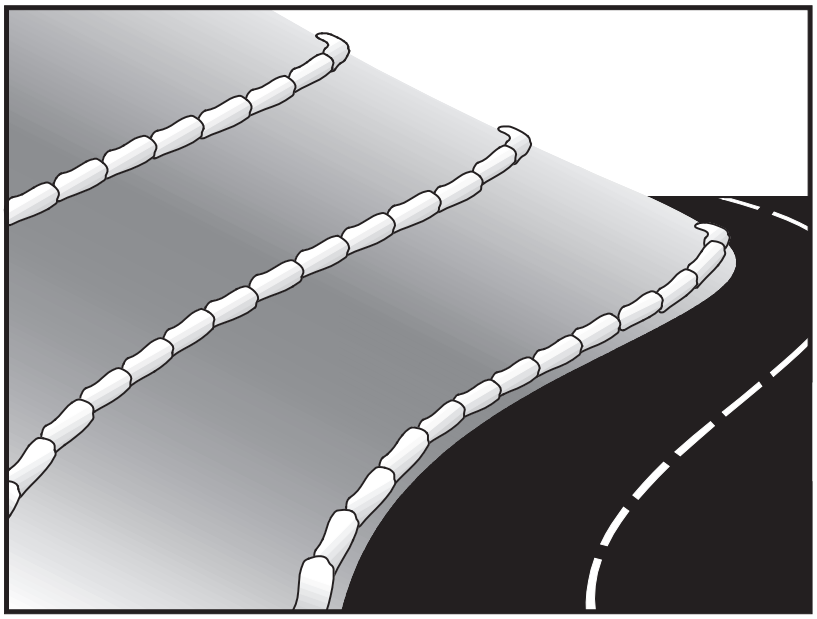

Categories

EC	Erosion Control	☒
SE	Sediment Control	☑
TC	Tracking Control	
WE	Wind Erosion Control	
NS	Non-Stormwater Management Control	
WM	Waste Management and Materials Pollution Control	

Legend:
☑ **Primary Category**
☒ **Secondary Category**

Targeted Constituents

Sediment	☑
Nutrients	
Trash	
Metals	
Bacteria	
Oil and Grease	
Organics	

Potential Alternatives

SE-1 Silt Fence
SE-5 Fiber Roll
SE-8 Sandbag Barrier
SE-12 Temporary Silt Dike
SE-14 Biofilter Bags

Copyright 2026 by the California Stormwater Quality Association

Description and Purpose

A gravel bag berm is a series of gravel-filled bags placed on a level contour to intercept sheet flows. Gravel bags pond sheet flow runoff, allowing sediment to settle out, and release runoff slowly as sheet flow, preventing erosion.

Suitable Applications

Gravel bag berms may be suitable:

- As a linear sediment control measure:
  - Below the toe of slopes and erodible slopes
  - As sediment traps at culvert/pipe outlets
  - Below other small cleared areas
  - Along the perimeter of a site
  - Down slope of exposed soil areas
  - Around temporary stockpiles and spoil areas
  - Parallel to a roadway to keep sediment off paved areas
  - Along streams and channels
- As a linear erosion control measure:
  - Along the face and at grade breaks of exposed and erodible slopes to shorten slope length and spread runoff as sheet flow.

CASQA
CALIFORNIA STORMWATER QUALITY ASSOCIATION

- At the top of slopes to divert runoff away from disturbed slopes.
- As chevrons (small check dams) across mildly sloped construction roads. For use check dam use in channels, see SE-4, Check Dams.

Limitations

- Gravel berms may be difficult to remove.
- Removal problems limit their usefulness in landscaped areas.
- Gravel bag berm may not be appropriate for drainage areas greater than 5 acres.
- Runoff will pond upstream of the berm, possibly causing flooding if sufficient space does not exist.
- Degraded gravel bags may rupture when removed, spilling contents.
- Installation can be labor intensive.
- Durability of gravel bags is somewhat limited, and bags may need to be replaced when installation is required for longer than 6 months.
- Easily damaged by construction equipment.
- When used to detain concentrated flows, maintenance requirements increase.

Implementation

General

A gravel bag berm consists of a row of open graded gravel-filled bags placed on a level contour. When appropriately placed, a gravel bag berm intercepts and slows sheet flow runoff, causing temporary ponding. The temporary ponding allows sediment to settle. The open graded gravel in the bags is porous, which allows the ponded runoff to flow slowly through the bags, releasing the runoff as sheet flows. Gravel bag berms also interrupt the slope length and thereby reduce erosion by reducing the tendency of sheet flows to concentrate into rivulets, which erode rills, and ultimately gullies, into disturbed, sloped soils. Gravel bag berms are similar to sand bag barriers but are more porous. Generally, gravel bag berms should be used in conjunction with temporary soil stabilization controls up slope to provide effective erosion and sediment control.

Design and Layout

- Locate gravel bag berms on level contours.
- When used for slope interruption, the following slope/sheet flow length combinations apply:
  - Slope inclination of 4:1 (H:V) or flatter: Gravel bags should be placed at a maximum interval of 20 ft, with the first row near the slope toe.
  - Slope inclination between 4:1 and 2:1 (H:V): Gravel bags should be placed at a maximum interval of 15 ft. (a closer spacing is more effective), with the first row near the slope toe.

Slope inclination 2:1 (H:V) or greater: Gravel bags should be placed at a maximum interval of 10 ft. (a closer spacing is more effective), with the first row near the slope toe.

- Turn the ends of the gravel bag barriers up slope to prevent runoff from going around the berm.
- Allow sufficient space up slope from the gravel bag berm to allow ponding, and to provide room for sediment storage.
- For installation near the toe of the slope, gravel bag barriers should be set back from the slope toe to facilitate cleaning. Where specific site conditions do not allow for a set-back, the gravel bag barrier may be constructed on the toe of the slope. To prevent flows behind the barrier, bags can be placed perpendicular to a berm to serve as cross barriers.
- Drainage area should not exceed 5 acres.
- In Non-Traffic Areas:
  - Height = 18 in. maximum
  - Top width = 24 in. minimum for three or more-layer construction
  - Top width = 12 in. minimum for one- or two-layer construction
  - Side slopes = 2:1 (H:V) or flatter
- In Construction Traffic Areas:
  - Height = 12 in. maximum
  - Top width = 24 in. minimum for three or more-layer construction.
  - Top width = 12 in. minimum for one- or two-layer construction.
  - Side slopes = 2:1 (H:V) or flatter.
- Butt ends of bags tightly.
- On multiple row, or multiple layer construction, overlap butt joints of adjacent row and row beneath.
- Use a pyramid approach when stacking bags.

Materials

- ***Bag Material:*** Bags should be woven polypropylene, polyethylene or polyamide fabric or burlap, minimum unit weight of 4 ounces/yd^2, Mullen burst strength exceeding 300 lb/in^2 in conformance with the requirements in ASTM designation D3786, and ultraviolet stability exceeding 70% in conformance with the requirements in ASTM designation D4355.

- ***Bag Size:*** Each gravel-filled bag should have a length of 18 in., width of 12 in., thickness of 3 in., and mass of approximately 33 lbs. Bag dimensions are nominal and may vary based on locally available materials.

- ***Fill Material:*** Fill material should be 0.5 to 1 in. Crushed rock, clean and free from clay, organic matter, and other deleterious material, or other suitable open graded, non-cohesive, porous gravel.

Inspection and Maintenance

- BMPs must be inspected in accordance with General Permit requirements for the associated project type and risk level. It is recommended that at a minimum, BMPs be inspected weekly, prior to forecasted rain events, daily during extended rain events, and after the conclusion of rain events.

- Gravel bags exposed to sunlight will need to be replaced every two to three months due to degrading of the bags.

- Reshape or replace gravel bags as needed.

- Repair washouts or other damage as needed.

- Sediment that accumulates in the BMP should be periodically removed in order to maintain BMP effectiveness. Sediment should be removed when the sediment accumulation reaches one-third of the barrier height.

- Remove gravel bag berms when no longer needed and recycle gravel fill whenever possible and properly dispose of bag material. Remove sediment accumulation and clean, re-grade, and stabilize the area.

References and Additional Resources

Construction Site Best Management Practices (BMPs) Manual CTSW-RT-24-425.11.1, California Department of Transportation (Caltrans), March 2024.

Handbook of Steel Drainage and Highway Construction, American Iron and Steel Institute, 1983.

Stormwater Pollution Plan Handbook, First Edition, State of California, Department of Transportation Division of New Technology, Materials and Research, October 1992.

Erosion and Sediment Control Manual, Oregon Department of Environmental Quality, February 2005.

Street Sweeping and Vacuuming SE-7



Categories

EC	Erosion Control	
SE	Sediment Control	☒
TC	Tracking Control	☑
WE	Wind Erosion Control	
NS	Non-Stormwater Management Control	
WM	Waste Management and Materials Pollution Control	

Legend:
☑ **Primary Objective**
☒ **Secondary Objective**

Targeted Constituents

Sediment	☑
Nutrients	
Trash	☑
Metals	
Bacteria	
Oil and Grease	☑
Organics	

Potential Alternatives

None

Copyright 2026 by the California Stormwater Quality Association

Description and Purpose

Street sweeping and vacuuming includes use of self-propelled and walk-behind equipment to remove sediment from streets and roadways and to clean paved surfaces in preparation for final paving. Sweeping and vacuuming prevents sediment from the project site from entering storm drains or receiving waters.

Suitable Applications

Sweeping and vacuuming are suitable anywhere sediment is tracked from the project site onto public or private paved streets and roads, typically at points of egress. Sweeping and vacuuming are also applicable during preparation of paved surfaces for final paving.

Limitations

- Sweeping and vacuuming may not be effective when sediment is wet or when tracked soil is caked (caked soil may need to be scraped loose).
- Sweeping may be less effective for fine particle soils (i.e., clay).

Implementation

- Controlling the number of points where vehicles can leave the site will allow sweeping and vacuuming efforts to be focused and perhaps save money.
- Inspect potential sediment tracking locations daily.

- Visible sediment tracking should be swept or vacuumed on a daily basis.
- Do not use kick brooms or sweeper attachments. These tend to spread the dirt rather than remove it.
- If not mixed with debris or trash, consider incorporating the removed sediment back into the project

Inspection and Maintenance

- Inspect BMPs in accordance with General Permit requirements for the associated project type and risk level. It is recommended that at a minimum, BMPs be inspected weekly, prior to forecasted rain events, daily during extended rain events, and after the conclusion of rain events.
- When actively in use, points of ingress and egress must be inspected daily.
- When tracked or spilled sediment is observed outside the construction limits, it must be removed at least daily. More frequent removal, even continuous removal, may be required in some jurisdictions.
- Be careful not to sweep up any unknown substance or any object that may be potentially hazardous.
- Adjust brooms frequently; maximize efficiency of sweeping operations.
- After sweeping is finished, properly dispose of sweeper wastes at an approved dumpsite.

References and Additional Resources

Construction Site Best Management Practices (BMPs) Manual CTSW-RT-24-425.11.1, California Department of Transportation (Caltrans), March 2024.

Storm Drain Inlet Protection SE-10

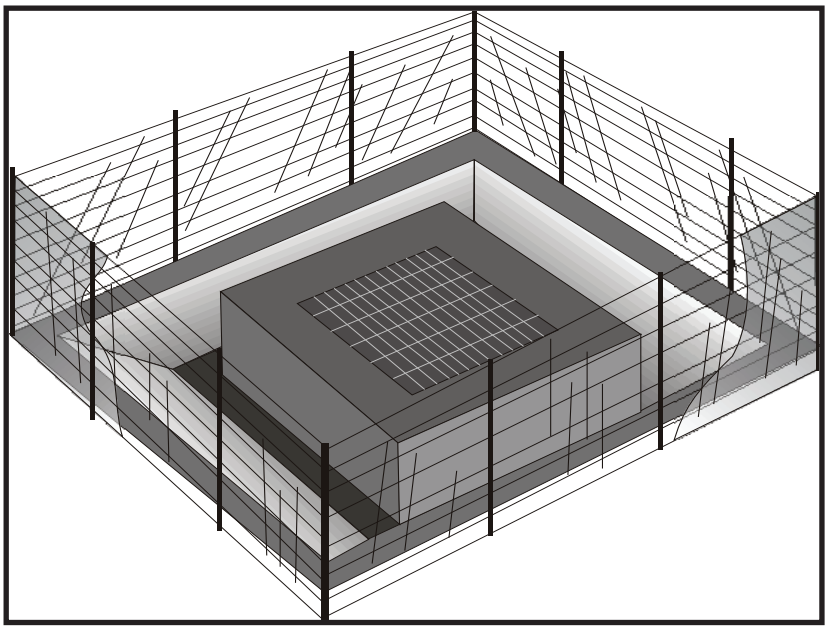

Categories

EC	Erosion Control	
SE	Sediment Control	☑
TC	Tracking Control	
WE	Wind Erosion Control	
NS	Non-Stormwater Management Control	
WM	Waste Management and Materials Pollution Control	

Legend:

☑ **Primary Category**

☒ **Secondary Category**

Targeted Constituents

Sediment	☑
Nutrients	
Trash	☒
Metals	
Bacteria	
Oil and Grease	
Organics	

Potential Alternatives

SE-1 Silt Fence

SE-5 Fiber Rolls

SE-6 Gravel Bag Berm

SE-8 Sandbag Barrier

SE-14 Biofilter Bags

SE-13 Compost Socks and Berms

Copyright 2026 by the California Stormwater Quality Association

Description and Purpose

Storm drain inlet protection consists of a sediment filter or an impounding area in, around or upstream of a storm drain, drop inlet, or curb inlet. Storm drain inlet protection measures temporarily pond runoff before it enters the storm drain, allowing sediment to settle. Some filter configurations also remove sediment by filtering, but usually the ponding action results in the greatest sediment reduction. Temporary geotextile storm drain inserts attach underneath storm drain grates to capture and filter storm water.

Suitable Applications

- Every storm drain inlet receiving runoff from unstabilized or otherwise active work areas should be protected. Inlet protection should be used in conjunction with other erosion and sediment controls to prevent sediment-laden stormwater and non-stormwater discharges from entering the storm drain system.

Limitations

- Drainage area should not exceed 1 acre.
- In general straw bales should not be used as inlet protection.
- Requires an adequate area for water to pond without encroaching into portions of the roadway subject to traffic.
- Sediment removal may be inadequate to prevent sediment discharges in high flow conditions or if runoff is heavily sediment laden. If high flow conditions are expected, use

CASQA
CALIFORNIA STORMWATER QUALITY ASSOCIATION

other onsite sediment trapping techniques in conjunction with inlet protection.

- Frequent maintenance is required.
- Limit drainage area to 1 acre maximum. For drainage areas larger than 1 acre, runoff should be routed to a sediment-trapping device designed for larger flows. See BMPs SE-2, Sediment Basin, and SE-3, Sediment Traps.
- Excavated drop inlet sediment traps are appropriate where relatively heavy flows are expected, and overflow capability is needed.

Implementation

General

Inlet control measures presented in this handbook should not be used for inlets draining more than one acre. Runoff from larger disturbed areas should be first routed through SE-2, Sediment Basin or SE-3, Sediment Trap and/or used in conjunction with other drainage control, erosion control, and sediment control BMPs to protect the site. Different types of inlet protection are appropriate for different applications depending on site conditions and the type of inlet. Alternative methods are available in addition to the methods described/shown herein such as prefabricated inlet insert devices, or gutter protection devices.

Design and Layout

Identify existing and planned storm drain inlets that have the potential to receive sediment-laden surface runoff. Determine if storm drain inlet protection is needed and which method to use.

- The key to successful and safe use of storm drain inlet protection devices is to know where runoff that is directed toward the inlet to be protected will pond or be diverted as a result of installing the protection device.
  - Determine the acceptable location and extent of ponding in the vicinity of the drain inlet. The acceptable location and extent of ponding will influence the type and design of the storm drain inlet protection device.
  - Determine the extent of potential runoff diversion caused by the storm drain inlet protection device. Runoff ponded by inlet protection devices may flow around the device and towards the next downstream inlet. In some cases, this is acceptable; in other cases, serious erosion or downstream property damage can be caused by these diversions. The possibility of runoff diversions will influence whether or not storm drain inlet protection is suitable; and, if suitable, the type and design of the device.
- The location and extent of ponding, and the extent of diversion, can usually be controlled through appropriate placement of the inlet protection device. In some cases, moving the inlet protection device a short distance upstream of the actual inlet can provide more efficient sediment control, limit ponding to desired areas, and prevent or control diversions.
- Seven types of inlet protection are presented below. However, it is recognized that other effective methods and proprietary devices exist and may be selected.

- Silt Fence: Appropriate for drainage basins with less than a 5% slope, sheet flows, and flows under 0.5 cfs.

- Excavated Drop Inlet Sediment Trap: An excavated area around the inlet to trap sediment (SE-3).

- Gravel bag barrier: Used to create a small sediment trap upstream of inlets on sloped, paved streets. Appropriate for sheet flow or when concentrated flow may exceed 0.5 cfs, and where overtopping is required to prevent flooding.

- Block and Gravel Filter: Appropriate for flows greater than 0.5 cfs.

- Temporary Geotextile Storm drain Inserts: Different products provide different features. Refer to manufacturer details for targeted pollutants and additional features.

- Biofilter Bag Barrier: Used to create a small retention area upstream of inlets and can be located on pavement or soil. Biofilter bags slowly filter runoff allowing sediment to settle out. Appropriate for flows under 0.5 cfs.

- Compost Socks: Allow filtered run-off to pass through the compost while retaining sediment and potentially other pollutants (SE-13). Appropriate for flows under 1.0 cfs.

- Select the appropriate type of inlet protection and design as referred to or as described in this fact sheet.

- Provide area around the inlet for water to pond without flooding structures and property.

- Grates and spaces around all inlets should be sealed to prevent seepage of sediment-laden water.

- Excavate sediment sumps (where needed) 1 to 2 ft with 2:1 side slopes around the inlet.

Installation

- ***DI Protection Type 1 - Silt Fence -*** Similar to constructing a silt fence; see BMP SE-1, Silt Fence. Do not place fabric underneath the inlet grate since the collected sediment may fall into the drain inlet when the fabric is removed or replaced and water flow through the grate will be blocked resulting in flooding. See typical Type 1 installation details at the end of this fact sheet.

  1. Excavate a trench approximately 6 in. wide and 6 in. deep along the line of the silt fence inlet protection device.

  2. Place 2 in. by 2 in. wooden stakes around the perimeter of the inlet a maximum of 3 ft apart and drive them at least 18 in. into the ground or 12 in. below the bottom of the trench. The stakes should be at least 48 in.

  3. Lay fabric along bottom of trench, up side of trench, and then up stakes. See SE-1, Silt Fence, for details. The maximum silt fence height around the inlet is 24 in.

4. Staple the filter fabric (for materials and specifications, see SE-1, Silt Fence) to wooden stakes. Use heavy-duty wire staples at least 1 in. in length.

5. Backfill the trench with gravel or compacted earth all the way around.

- ***DI Protection Type 2 - Excavated Drop Inlet Sediment Trap -*** Install filter fabric fence in accordance with DI Protection Type 1. Size excavated trap to provide a minimum storage capacity calculated at the rate 67 yd^3/acre of drainage area. See typical Type 2 installation details at the end of this fact sheet.

- ***DI Protection Type 3 - Gravel bag -*** Flow from a severe storm should not overtop the curb. In areas of high clay and silts, use filter fabric and gravel as additional filter media. Construct gravel bags in accordance with SE-6, Gravel Bag Berm. Gravel bags should be used due to their high permeability. See typical Type 3 installation details at the end of this fact sheet.

  1. Construct on gently sloping street.

  2. Leave room upstream of barrier for water to pond and sediment to settle.

  3. Place several layers of gravel bags – overlapping the bags and packing them tightly together.

  4. Leave gap of one bag on the top row to serve as a spillway. Flow from a severe storm (e.g., 10-year storm) should not overtop the curb.

- ***DI Protection Type 4 – Block and Gravel Filter -*** Block and gravel filters are suitable for curb inlets commonly used in residential, commercial, and industrial construction. See typical Type 4 installation details at the end of this fact sheet.

  1. Place hardware cloth or comparable wire mesh with 0.5 in. openings over the drop inlet so that the wire extends a minimum of 1 ft beyond each side of the inlet structure. If more than one strip is necessary, overlap the strips. Place woven geotextile over the wire mesh.

  2. Place concrete blocks lengthwise on their sides in a single row around the perimeter of the inlet, so that the open ends face outward, not upward. The ends of adjacent blocks should abut. The height of the barrier can be varied, depending on design needs, by stacking combinations of blocks that are 4 in., 8 in., and 12 in. wide. The row of blocks should be at least 12 in. but no greater than 24 in. high.

  3. Place wire mesh over the outside vertical face (open end) of the concrete blocks to prevent stone from being washed through the blocks. Use hardware cloth or comparable wire mesh with 0.5 in. opening.

  4. Pile washed stone against the wire mesh to the top of the blocks. Use 0.75 to 3 in.

- ***DI Protection Type 5 – Temporary Geotextile Insert (proprietary) –*** Many types of temporary inserts are available. Most inserts fit underneath the grate of a drop inlet or inside of a curb inlet and are fastened to the outside of the grate or curb. These inserts are

removable, and many can be cleaned and reused. Installation of these inserts differs between manufacturers. Please refer to manufacturer instruction for installation of proprietary devices.

- ***DI Protection Type 6 - Biofilter bags*** – Biofilter bags may be used as a substitute for gravel bags in low-flow situations. Biofilter bags should conform to specifications detailed in SE-14, Biofilter bags.

    1. Construct in a gently sloping area.
    2. Biofilter bags should be placed around inlets to intercept runoff flows.
    3. All bag joints should overlap by 6 in.
    4. Leave room upstream for water to pond and for sediment to settle out.
    5. Stake bags to the ground as described in the following detail. Stakes may be omitted if bags are placed on a paved surface.

- ***DI Protection Type 7 – Compost Socks*** – A compost sock can be assembled on site by filling a mesh sock (e.g., with a pneumatic blower). Compost socks do not require special trenching compared to other sediment control methods (e.g., silt fence). Compost socks should conform to specification detailed in SE-13, Compost Socks and Berms.

Inspection and Maintenance

- BMPs must be inspected in accordance with General Permit requirements for the associated project type and risk level. It is recommended that at a minimum, BMPs be inspected weekly, prior to forecasted rain events, daily during extended rain events, and after the conclusion of rain events.

- Silt Fences. If the fabric becomes clogged, torn, or degrades, it should be replaced. Make sure the stakes are securely driven in the ground and are in good shape (i.e., not bent, cracked, or splintered, and are reasonably perpendicular to the ground). Replace damaged stakes. At a minimum, remove the sediment behind the fabric fence when accumulation reaches one-third the height of the fence or barrier height.

- Gravel Filters. If the gravel becomes clogged with sediment, it should be carefully removed from the inlet and either cleaned or replaced. Since cleaning gravel at a construction site may be difficult, consider using the sediment-laden stone as fill material and put fresh stone around the inlet. Inspect bags for holes, gashes, and snags, and replace bags as needed. Check gravel bags for proper arrangement and displacement.

- Sediment that accumulates in the BMP should be periodically removed in order to maintain BMP effectiveness. Sediment should be removed when the sediment accumulation reaches one-third of the barrier height.

- Inspect and maintain temporary geotextile insert devices according to manufacturer's specifications.

- Remove storm drain inlet protection once the drainage area is stabilized.

- Clean and regrade area around the inlet and clean the inside of the storm drain inlet, as it should be free of sediment and debris at the time of final inspection.

References and Additional Resources

Construction Site Best Management Practices (BMPs) Manual CTSW-RT-24-425.11.1, California Department of Transportation (Caltrans), March 2024.

Stormwater Management Manual for The Puget Sound Basin, Washington State Department of Ecology, Public Review Draft, 1991.

Erosion and Sediment Control Manual, Oregon Department of Environmental Quality, February 2005.

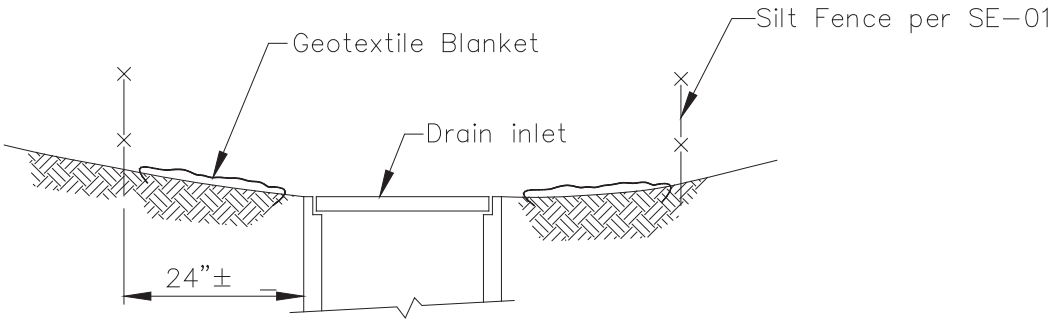

SECTION A–A

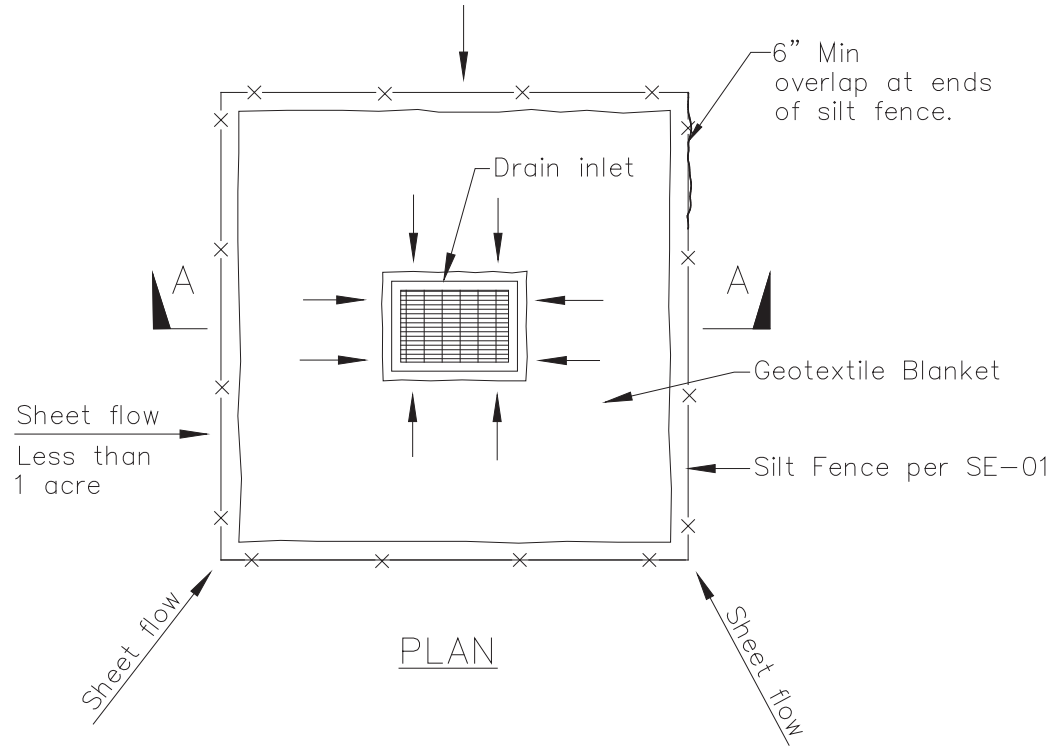

PLAN

DI PROTECTION TYPE 1
NOT TO SCALE

NOTES:

1. For use in areas where grading has been completed and final soil stabilization and seeding are pending.
2. Not applicable in paved areas.
3. Not applicable with concentrated flows.

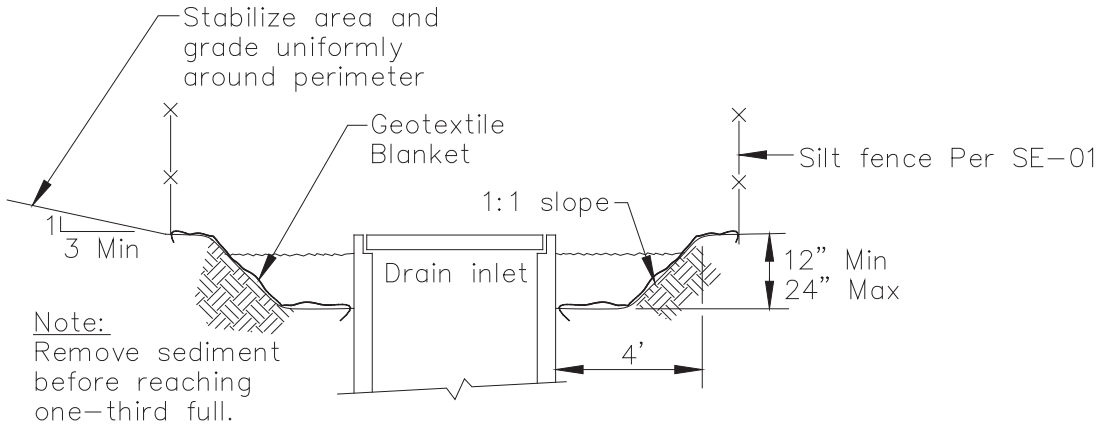

Section A–A

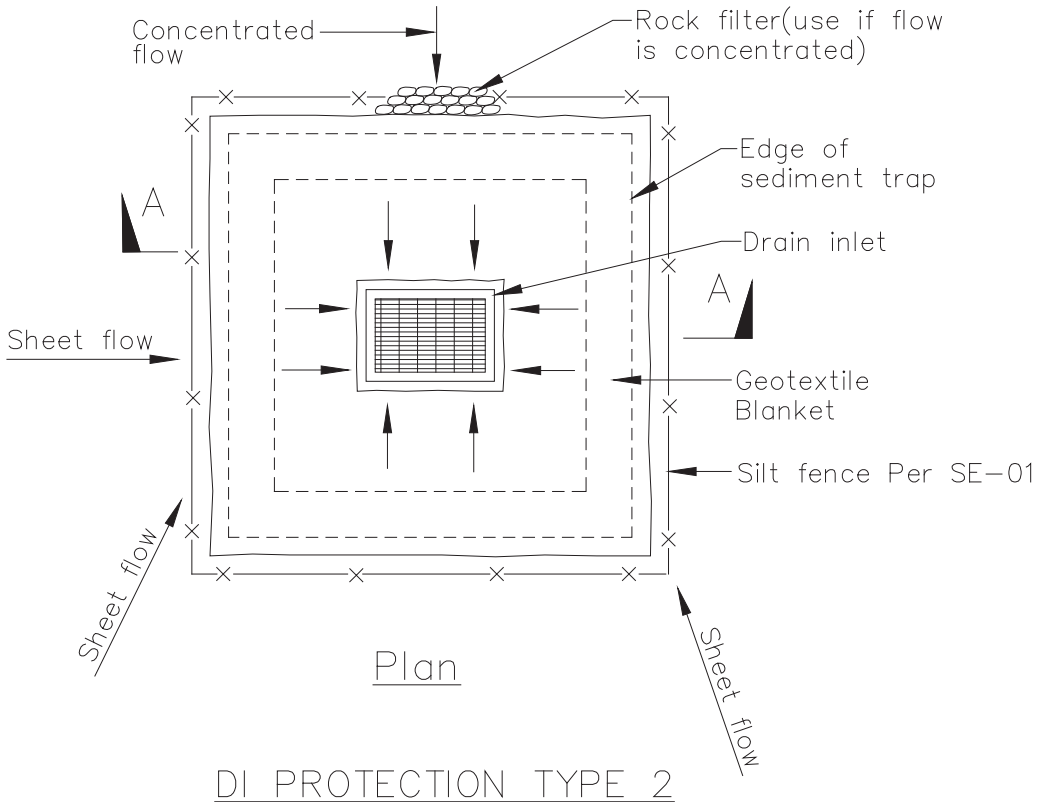

Plan

DI PROTECTION TYPE 2
NOT TO SCALE

Notes
1. For use in cleared and grubbed and in graded areas.
2. Shape basin so that longest inflow area faces longest length of trap.
3. For concentrated flows, shape basin in 2:1 ratio with length oriented towards direction of flow.

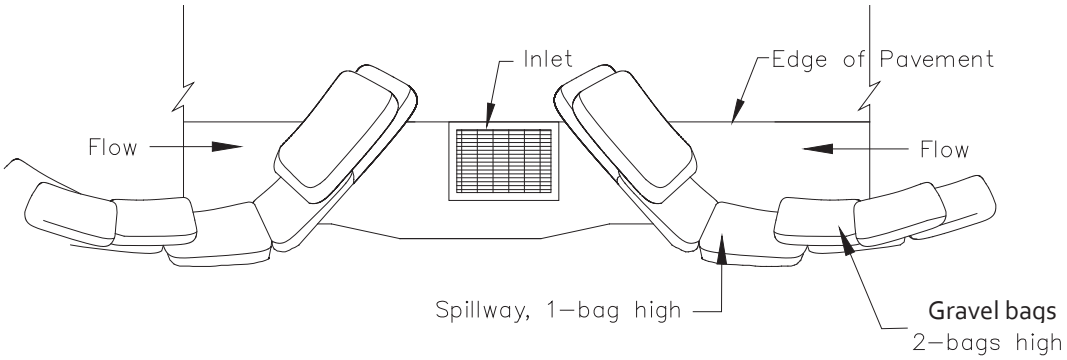

TYPICAL PROTECTION FOR INLET ON SUMP

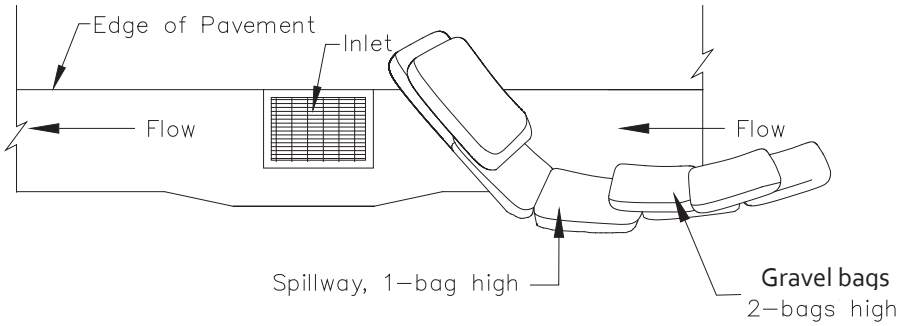

TYPICAL PROTECTION FOR INLET ON GRADE

NOTES:

1. Intended for short–term use.
2. Use to inhibit non–storm water flow.
3. Allow for proper maintenance and cleanup.
4. Bags must be removed after adjacent operation is completed
5. Not applicable in areas with high silts and clays without filter fabric.
6. Protection can be effective even if it is not immediately adjacent to the inlet provided that the inlet is protected from potential sources of pollution.

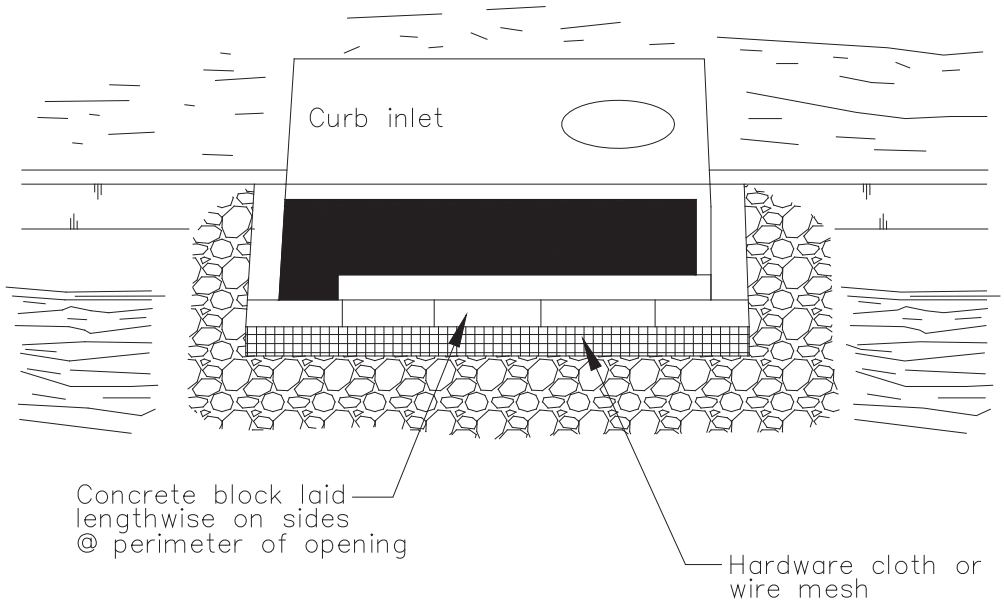

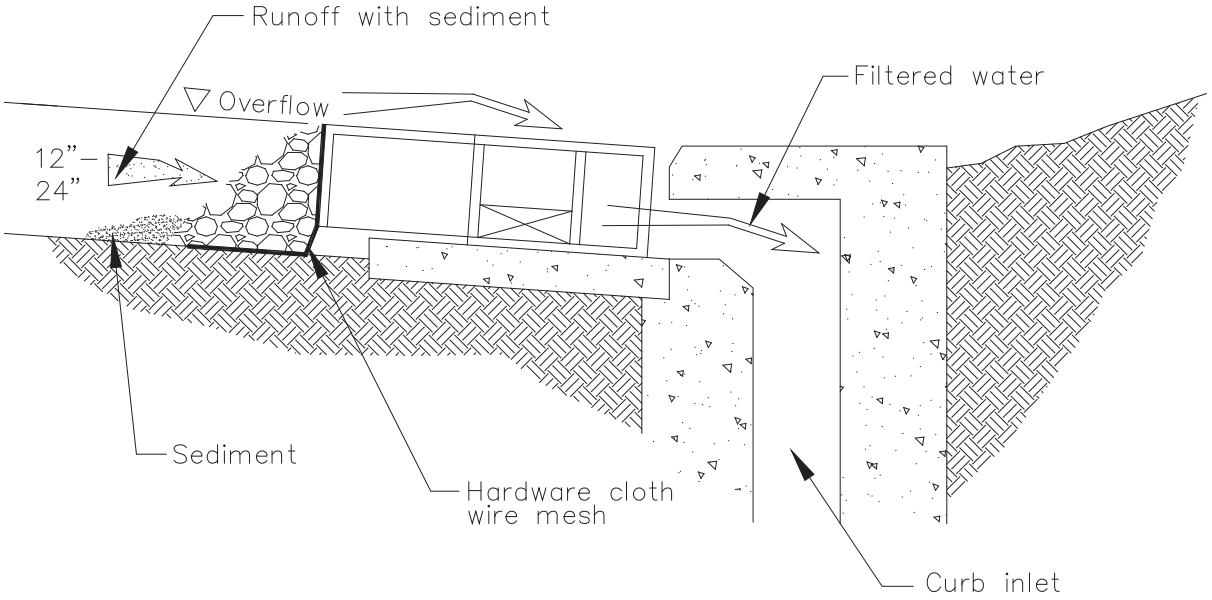

DI PROTECTION – TYPE 4
NOT TO SCALE

Stabilized Construction Entrance/Exit TC-1

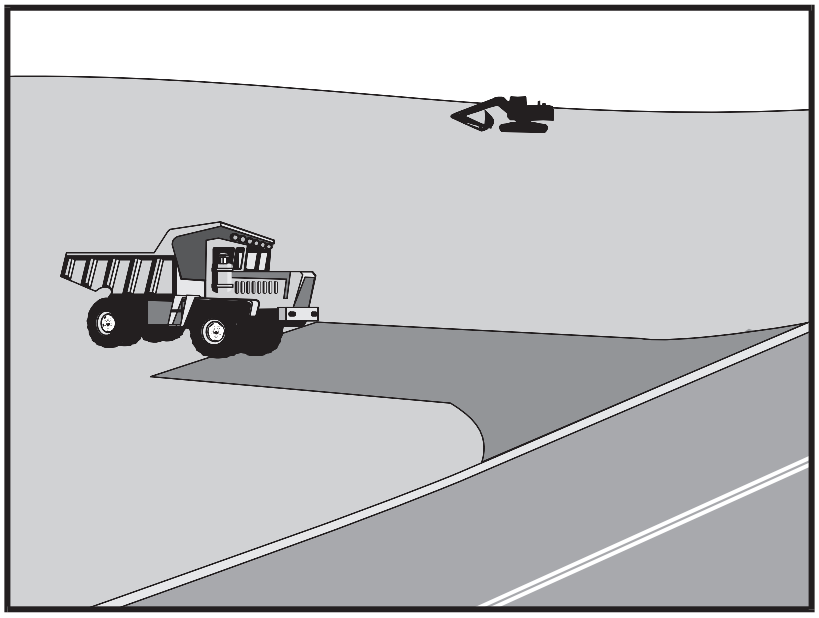

Categories

EC	Erosion Control	☒
SE	Sediment Control	☒
TC	Tracking Control	☑
WE	Wind Erosion Control	
NS	Non-Stormwater Management Control	
WM	Waste Management and Materials Pollution Control	

Legend:

☑ **Primary Objective**

☒ **Secondary Objective**

Targeted Constituents

Sediment	☑
Nutrients	
Trash	
Metals	
Bacteria	
Oil and Grease	
Organics	

Potential Alternatives

None

Copyright 2026 by the California Stormwater Quality Association

Description and Purpose

A stabilized construction access is defined by a point of entrance/exit to a construction site that is stabilized to reduce the tracking of mud and dirt onto public roads by construction vehicles.

Suitable Applications

Use at construction sites:

- Where dirt or mud can be tracked onto public roads.
- Adjacent to water bodies.
- Where poor soils are encountered.
- Where dust is a problem during dry weather conditions.

Limitations

- Entrances and exits require periodic top dressing with additional stones.
- This BMP should be used in conjunction with street sweeping on adjacent public right of way.
- Entrances and exits should be constructed on level ground only.
- Stabilized construction entrances are rather expensive to construct and when a wash rack is included, a sediment trap of some kind must also be provided to collect wash water runoff.

CASQA
CALIFORNIA STORMWATER QUALITY ASSOCIATION

Stabilized Construction Entrance/Exit TC-1

Implementation

General

A stabilized construction entrance is a pad of aggregate underlain with filter cloth located at any point where traffic will be entering or leaving a construction site to or from a public right of way, street, alley, sidewalk, or parking area. The purpose of a stabilized construction entrance is to reduce or eliminate the tracking of sediment onto public rights of way or streets. Reducing tracking of sediments and other pollutants onto paved roads helps prevent deposition of sediments into local storm drains and production of airborne dust.

Where traffic will be entering or leaving the construction site, a stabilized construction entrance should be used. NPDES permits require that appropriate measures be implemented to prevent tracking of sediments onto paved roadways, where a significant source of sediments is derived from mud and dirt carried out from unpaved roads and construction sites.

Stabilized construction entrances are moderately effective in removing sediment from equipment leaving a construction site. The entrance should be built on level ground. Advantages of the Stabilized Construction Entrance/Exit is that it does remove some sediment from equipment and serves to channel construction traffic in and out of the site at specified locations. Efficiency is greatly increased when a washing rack is included as part of a stabilized construction entrance/exit.

Design and Layout

- Construct on level ground where possible.
- Select 3 to 6 in. diameter stones.
- Use minimum depth of stones of 12 in. or as recommended by soils engineer.
- Construct length of 50 ft or maximum site will allow, and 10 ft minimum width or to accommodate traffic.
- Rumble racks constructed of steel panels with ridges and installed in the stabilized entrance/exit will help remove additional sediment and to keep adjacent streets clean.
- Provide ample turning radii as part of the entrance.
- Limit the points of entrance/exit to the construction site.
- Limit speed of vehicles to control dust.
- Properly grade each construction entrance/exit to prevent runoff from leaving the construction site.
- Route runoff from stabilized entrances/exits through a sediment trapping device before discharge.
- Design stabilized entrance/exit to support heaviest vehicles and equipment that will use it.

- Select construction access stabilization (aggregate, asphaltic concrete, concrete) based on longevity, required performance, and site conditions. Do not use asphalt concrete (AC) grindings for stabilized construction access/roadway.
- If aggregate is selected, place crushed aggregate over geotextile fabric to at least 12 in. depth, or place aggregate to a depth recommended by a geotechnical engineer. A crushed aggregate greater than 3 in. but smaller than 6 in. should be used.
- Designate combination or single purpose entrances and exits to the construction site.
- Require that all employees, subcontractors, and suppliers utilize the stabilized construction access.
- Implement SE-7, Street Sweeping and Vacuuming, as needed.
- All exit locations intended to be used for more than a two-week period should have stabilized construction entrance/exit BMPs.

Inspection and Maintenance

- Inspect and verify that activity–based BMPs are in place prior to the commencement of associated activities. While activities associated with the BMPs are under way, inspect BMPs in accordance with General Permit requirements for the associated project type and risk level. It is recommended that at a minimum, BMPs be inspected weekly, prior to forecasted rain events, daily during extended rain events, and after the conclusion of rain events.
- Inspect local roads adjacent to the site daily. Sweep or vacuum to remove visible accumulated sediment.
- Remove aggregate, separate and dispose of sediment if construction entrance/exit is clogged with sediment.
- Keep all temporary roadway ditches clear.
- Check for damage and repair as needed.
- Replace gravel material when surface voids are visible.
- Remove all sediment deposited on paved roadways within 24 hours.
- Remove gravel and filter fabric at completion of construction

References and Additional Resources

Construction Site Best Management Practices (BMPs) Manual, CTSW-RT-24-425.11.1, California Department of Transportation (Caltrans), March 2024.

Manual of Standards of Erosion and Sediment Control Measures, Association of Bay Area Governments, May 1995.

National Management Measures to Control Nonpoint Source Pollution from Urban Areas, USEPA Agency, 2002.

Proposed Guidance Specifying Management Measures for Sources of Nonpoint Pollution in Coastal Waters, Work Group Working Paper, USEPA, April 1992.

Stormwater Management of the Puget Sound Basin, Technical Manual, Publication #91-75, Washington State Department of Ecology, February 1992.

Virginia Erosion and Sedimentation Control Handbook, Virginia Department of Conservation and Recreation, Division of Soil and Water Conservation, 1991.

Guidance Specifying Management Measures for Nonpoint Pollution in Coastal Waters, EPA 840-B-9-002, USEPA, Office of Water, Washington, DC, 1993.

Water Quality Management Plan for the Lake Tahoe Region, Volume II, Handbook of Management Practices, Tahoe Regional Planning Agency, November 1988.

Stabilized Construction Entrance/Exit TC-1

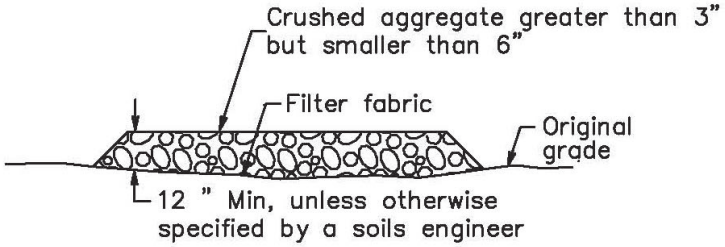

SECTION B–B
NTS

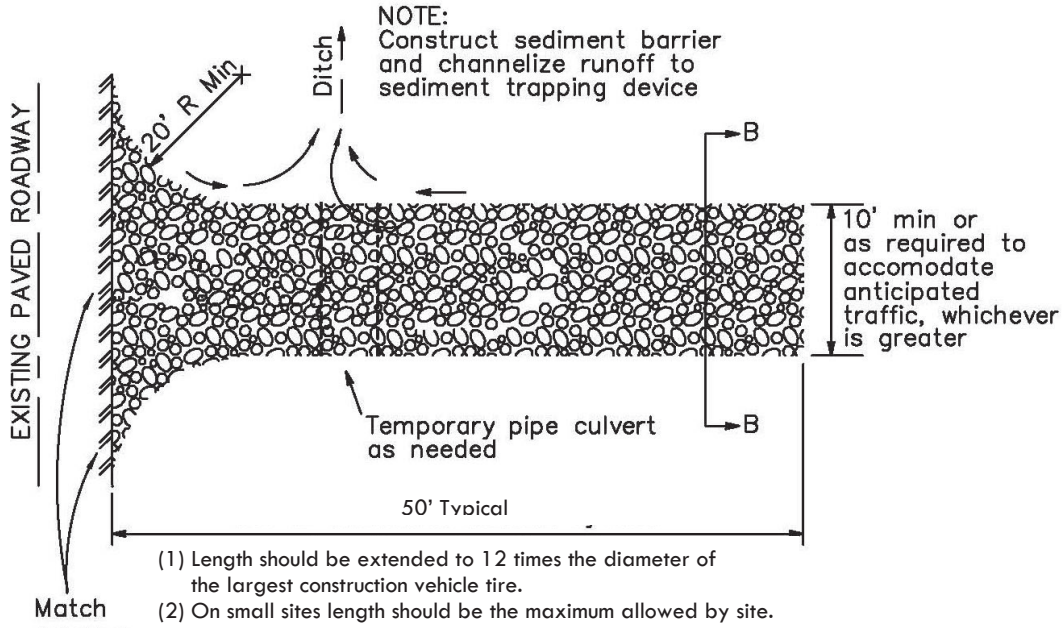

PLAN
NTS

Stabilized Construction Entrance/Exit TC-1

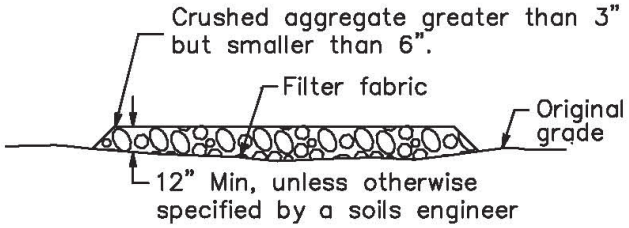

SECTION B–B
NTS

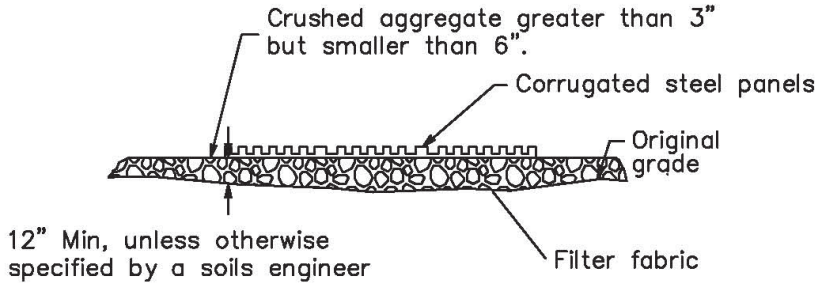

SECTION A–A
NOT TO SCALE

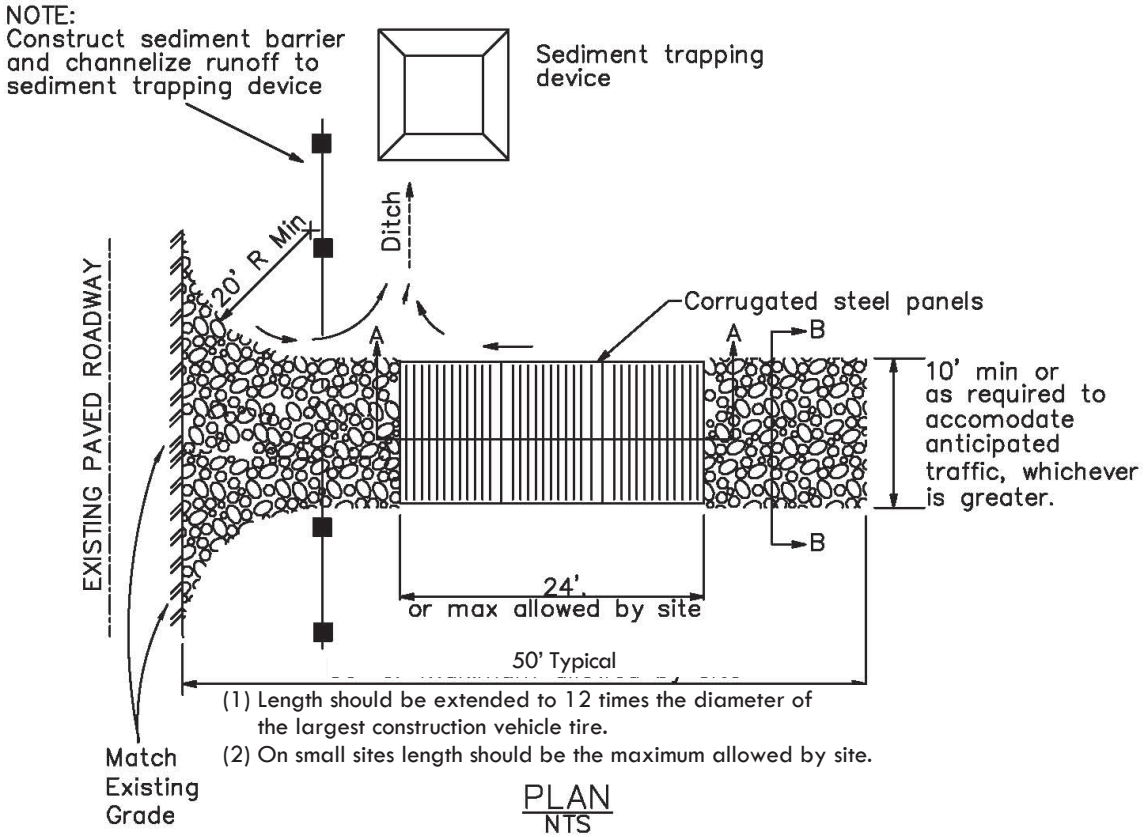

PLAN
NTS

Wind Erosion Control WE-1

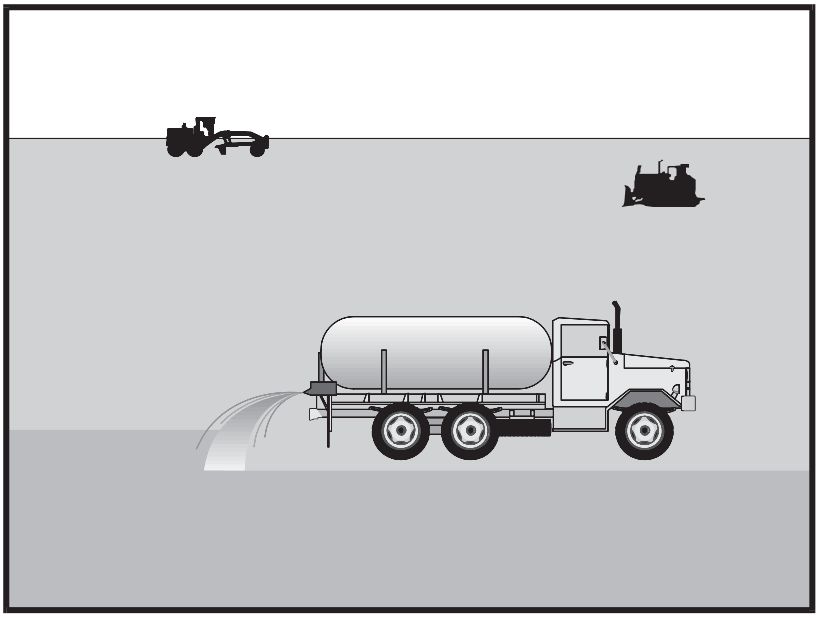

Categories

EC	Erosion Control	
SE	Sediment Control	☒
TC	Tracking Control	
WE	Wind Erosion Control	☑
NS	Non-Stormwater Management Control	
WM	Waste Management and Materials Pollution Control	

Legend:

☑ **Primary Category**

☒ **Secondary Category**

Targeted Constituents

Sediment	☑
Nutrients	
Trash	
Metals	
Bacteria	
Oil and Grease	
Organics	

Potential Alternatives

EC-5 Soil Binders

Copyright 2026 by the California Stormwater Quality Association

Description and Purpose

Wind erosion or dust control consists of applying water or other chemical dust suppressants as necessary to prevent or alleviate dust nuisance generated by construction activities. Covering small stockpiles or areas is an alternative to applying water or other dust palliatives.

California's Mediterranean climate, with a short "wet" season and a typically long, hot "dry" season, allows the soils to thoroughly dry out. During the dry season, construction activities are at their peak, and disturbed and exposed areas are increasingly subject to wind erosion, sediment tracking, and dust generated by construction equipment. Site conditions and climate can make dust control more of an erosion problem than water-based erosion. Additionally, many local agencies, including Air Quality Management Districts, require dust control and/or dust control permits in order to comply with local nuisance laws, opacity laws (visibility impairment) and the requirements of the Clean Air Act. Wind erosion control is required to be implemented at all construction sites greater than 1 acre by the General Permit.

Suitable Applications

Most BMPs that provide protection against water-based erosion will also protect against wind-based erosion and dust control requirements required by other agencies will generally meet wind erosion control requirements for water quality protection. Wind erosion control BMPs are suitable during the following construction activities:

- Construction vehicle traffic on unpaved roads
- Drilling and blasting activities
- Soils and debris storage piles
- Batch drop from front-end loaders
- Areas with unstabilized soil
- Final grading/site stabilization

Limitations

- Watering prevents dust only for a short period (generally less than a few hours) and should be applied daily (or more often) to be effective.
- Over watering may cause erosion and track-out.
- Oil or oil-treated subgrade should not be used for dust control because the oil may migrate into drainageways and/or seep into the soil.
- Chemical dust suppression agents may have potential environmental impacts. Selected chemical dust control agents should be environmentally benign.
- Effectiveness of controls depends on soil, temperature, humidity, wind velocity and traffic.
- Chemical dust suppression agents should not be used within 100 feet of wetlands or water bodies.
- Chemically treated subgrades may make the soil water repellant, interfering with long-term infiltration and the vegetation/re-vegetation of the site. Some chemical dust suppressants may be subject to freezing and may contain solvents and should be handled properly.
- In compacted areas, watering and other liquid dust control measures may wash sediment or other constituents into the drainage system.
- If the soil surface has minimal natural moisture, the affected area may need to be pre-wetted so that chemical dust control agents can uniformly penetrate the soil surface.

Implementation

Dust Control Practices

Dust control BMPs generally stabilize exposed surfaces and minimize activities that suspend or track dust particles. The following table presents dust control practices that can be applied to varying site conditions that could potentially cause dust. For heavily traveled and disturbed areas, wet suppression (watering), chemical dust suppression, gravel asphalt surfacing, temporary gravel construction entrances, equipment wash-out areas, and haul truck covers can be employed as dust control applications. Permanent or temporary vegetation and mulching can be employed for areas of occasional or no construction traffic. Preventive measures include

minimizing surface areas to be disturbed, limiting onsite vehicle traffic to 15 mph or less, and controlling the number and activity of vehicles on a site at any given time.

Chemical dust suppressants include: mulch and fiber based dust palliatives (e.g. paper mulch with gypsum binder), salts and brines (e.g. calcium chloride, magnesium chloride), non-petroleum based organics (e.g. vegetable oil, lignosulfonate), petroleum based organics (e.g. asphalt emulsion, dust oils, petroleum resins), synthetic polymers (e.g. polyvinyl acetate, vinyl, acrylic), clay additives (e.g. bentonite, montmorillonite) and electrochemical products (e.g. enzymes, ionic products).

Site Condition	Dust Control Practices							
	Permanent Vegetation	Mulching	Wet Suppression (Watering)	Chemical Dust Suppression	Gravel or Asphalt	Temporary Gravel Construction Entrances/Equipment Wash Down	Synthetic Covers	Minimize Extent of Disturbed Area
Disturbed Areas not Subject to Traffic	x	x	x	x	x			x
Disturbed Areas Subject to Traffic			x	x	x	x		x
Material Stockpiles		x	x	x			x	x
Demolition			x			x	x	
Clearing/ Excavation			x	x				x
Truck Traffic on Unpaved Roads			x	x	x	x	x	
Tracking					x	x		

Additional preventive measures include:

- Schedule construction activities to minimize exposed area (see EC-1, Scheduling).
- Quickly treat exposed soils using water, mulching, chemical dust suppressants, or stone/gravel layering.
- Identify and stabilize key access points prior to commencement of construction.
- Minimize the impact of dust by anticipating the direction of prevailing winds.
- Restrict construction traffic to stabilized roadways within the project site, as practicable.
- Water should be applied by means of pressure-type distributors or pipelines equipped with a spray system or hoses and nozzles that will ensure even distribution.
- All distribution equipment should be equipped with a positive means of shutoff.
- Unless water is applied by means of pipelines, at least one mobile unit should be available at all times to apply water or dust palliative to the project.
- If reclaimed waste water is used, the sources and discharge must meet California Department of Health Services water reclamation criteria and the Regional Water Quality

Control Board (RWQCB) requirements. Non-potable water should not be conveyed in tanks or drain pipes that will be used to convey potable water and there should be no connection between potable and non-potable supplies. Non-potable tanks, pipes, and other conveyances should be marked, "NON-POTABLE WATER - DO NOT DRINK."

- Pave or chemically stabilize access points where unpaved traffic surfaces adjoin paved roads.
- Provide covers for haul trucks transporting materials that contribute to dust.
- Provide for rapid clean up of sediments deposited on paved roads. Furnish stabilized construction road entrances and wheel wash areas.
- Stabilize inactive areas of construction sites using temporary vegetation or chemical stabilization methods.

For chemical stabilization, there are many products available for chemically stabilizing gravel roadways and stockpiles. If chemical stabilization is used, the chemicals should not create any adverse effects on stormwater, plant life, or groundwater and should meet all applicable regulatory requirements.

Inspection and Maintenance

- Inspect and verify that activity-based BMPs are in place prior to the commencement of associated activities.
- BMPs must be inspected in accordance with General Permit requirements for the associated project type and risk level. It is recommended that at a minimum, BMPs be inspected weekly, prior to forecasted rain events, daily during extended rain events, and after the conclusion of rain events.
- Check areas protected to ensure coverage.
- Most water-based dust control measures require frequent application, often daily or even multiple times per day. Obtain vendor or independent information on longevity of chemical dust suppressants.

References and Additional Resources

Best Management Practices and Erosion Control Manual for Construction Sites, Flood Control District of Maricopa County, Arizona, September 1992.

California Air Pollution Control Laws, California Air Resources Board, updated annually.

Construction Manual, Chapter 4, Section 10, "Dust Control"; Section 17, "Watering"; and Section 18, "Dust Palliative", California Department of Transportation (Caltrans), July 2001.

Construction Site Best Management Practices (BMPs) Manual, CTSW-RT-24-425.11.1, California Department of Transportation (Caltrans), March 2024.

Prospects for Attaining the State Ambient Air Quality Standards for Suspended Particulate Matter (PM10), Visibility Reducing Particles, Sulfates, Lead, and Hydrogen Sulfide, California Air Resources Board, April 1991.

Water Conservation Practices NS-1

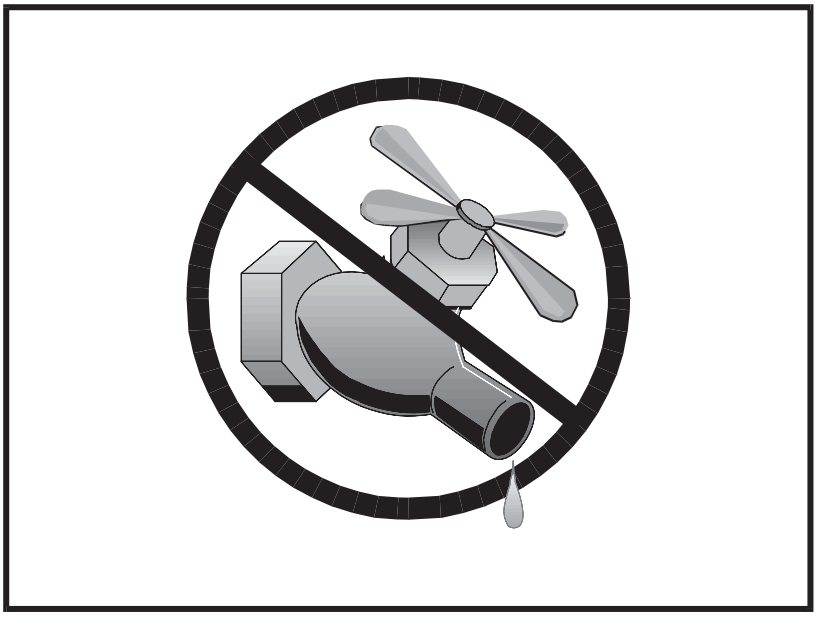

Categories

EC	Erosion Control	☒
SE	Sediment Control	☒
TC	Tracking Control	
WE	Wind Erosion Control	
NS	Non-Stormwater Management Control	☑
WM	Waste Management and Materials Pollution Control	

Legend:

☑ **Primary Objective**

☒ **Secondary Objective**

Targeted Constituents

Sediment	☑
Nutrients	
Trash	
Metals	
Bacteria	
Oil and Grease	
Organics	

Potential Alternatives

None

Description and Purpose

Water conservation practices are activities that use water during the construction of a project in a manner that avoids causing erosion and the transport of pollutants offsite. These practices can reduce or eliminate non-stormwater discharges.

Suitable Applications

Water conservation practices are suitable for all construction sites where water is used, including piped water, metered water, trucked water, and water from a reservoir.

Limitations

- None identified.

Implementation

- Keep water equipment in good working condition.
- Stabilize water truck filling area.
- Repair water leaks promptly.
- Washing of vehicles and equipment on the construction site is discouraged.
- Avoid using water to clean construction areas. If water must be used for cleaning or surface preparation, surface should be swept and vacuumed first to remove dirt. This will minimize amount of water required.

Copyright 2026 by the California Stormwater Quality Association

CASQA
CALIFORNIA STORMWATER QUALITY ASSOCIATION®

- Direct construction water runoff to areas where it can soak into the ground or be collected and used.
- Authorized non-stormwater discharges to the storm drain system, channels, or receiving waters are acceptable with the implementation of appropriate BMPs.
- Lock water tank valves to prevent unauthorized use.

Inspection and Maintenance

- Inspect and verify that activity based BMPs are in place prior to the commencement of authorized non-stormwater discharges.
- Inspect BMPs in accordance with General Permit requirements for the associated project type and risk level. It is recommended that at a minimum, BMPs be inspected weekly, prior to forecasted rain events, daily during extended rain events, and after the conclusion of rain events.
- Inspect BMPs subject to non-stormwater discharges daily while non-stormwater discharges are occuring.
- Repair water equipment as needed to prevent unintended discharges.
  - Water trucks
  - Water reservoirs (water buffalos)
  - Irrigation systems
  - Hydrant connections

References and Additional Resources

Construction Site Best Management Practices (BMPs) Manual, CTSW-RT-24-425.11.1, California Department of Transportation (Caltrans), March 2024.

Dewatering Operations NS-2

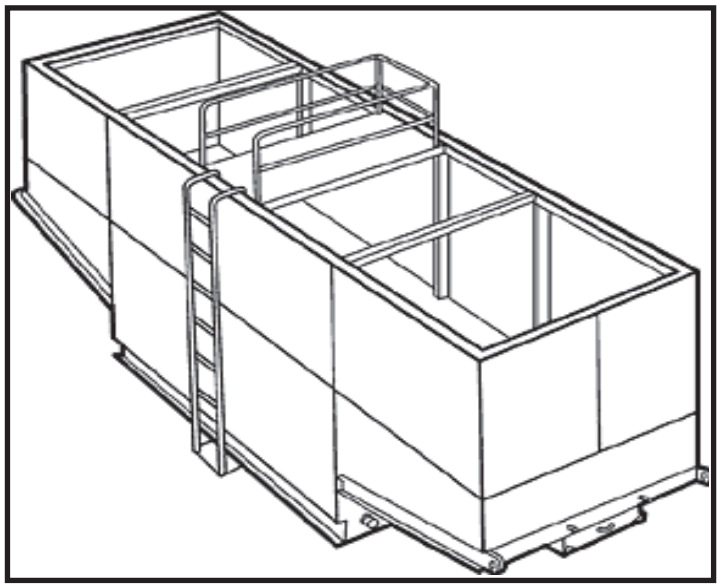

Description and Purpose

Dewatering operations are practices that manage the discharge of pollutants when non-stormwater, non-potable water, and accumulated precipitation (stormwater) is removed from a work location to proceed with construction work or to provide vector control.

The 2022 General Permit defines dewatering as the process of removing excess water in an excavation or impoundment by pumping or other mechanical means. Dewatering discharges authorized by the 2022 General Permit include mechanical pumping or syphoning of non-potable water from sources including, but not limited to: excavations, trenches, foundations, vaults, groundwater removal specifically related to the construction activities, and/or water collected in impoundments (e.g., ponds, puddles, low points on the active site, or other similar accumulation points).

This factsheet specifically incorporates the 2022 General Permit, Attachment J requirements. Dewatering activities subject to a separate National Pollutant Discharge Elimination System (NPDES) permit (e.g., de minimis and low threat discharges) are not subject to the dewatering requirements of Attachment J; obtain separate coverage as required by the State Water Resources Control Board (SWRCB) or the applicable Regional Water Quality Control Board (RWQCB). Potentially applicable NPDES Permits for Dewatering Discharges are listed in the SWRCB's Dewatering Discharge Notification Guidance (SWRCB, 2024). Ensure that dewatering activities not subject to a separate NPDES permit comply with the dewatering requirements in Attachment J (Section IV.M. of the 2022 General Permit).

Categories

EC	Erosion Control	
SE	Sediment Control	☒
TC	Tracking Control	
WE	Wind Erosion Control	
NS	Non-Stormwater Management Control	☑
WM	Waste Management and Materials Pollution Control	

Legend:

☑ **Primary Category**

☒ **Secondary Category**

Targeted Constituents

Sediment	☑
Nutrients	
Trash	
Metals	
Bacteria	
Oil and Grease	☑
Organics	

Potential Alternatives

SE-5: Fiber Roll

SE-13: Compost Sock/Berm

SE-6: Gravel Bag Berm

NS-5: Clear Water Diversion

Copyright 2026 by the California Stormwater Quality Association

The General Permit incorporates Numeric Action Levels (NALs) for pH and turbidity for dewatering discharges. Discharges from dewatering operations can contain high levels of fine sediment that, if not properly treated, could lead to exceedances of the General Permit requirements or Basin Plan standards.

The dewatering operations described in this fact sheet are not Active Treatment Systems (ATS) SE-11) and do not include the use of chemical coagulants, chemical flocculants or electrocoagulants. ATS that are not subject to a separate NPDES permit must comply with the ATS requirements in Attachment F of the 2022 General Permit.

Discharges from Sediment Basins (SE-2) and Sediment Traps (SE-3) may be subject to the dewatering requirements of Attachment J of the 2022 General Permit. Sediment basin and sediment trap configuration and valve design, required drawdown time for vector control, operational drawdown in case of more frequent storms or storms larger than the design storm, or other unforeseen site conditions may result in the need to dewater a sediment basin and/or sediment trap, thus triggering Attachment J. Sediment basins and sediment traps that discharge under gravity flow with no mechanical pumping or syphoning, for example containing a skimmer or standpipe outlet structure, are not considered dewatering practices that would trigger the requirements of Attachment J.

Suitable Applications

Dewatering practices are implemented for discharges of non-stormwater, non-potable water, and accumulated stormwater by mechanical pumping or syphoning from construction sites.

Non-stormwaters include, but are not limited to, groundwater, water from cofferdams, water diversions, and waters used during construction activities that must be removed from a work area to facilitate construction.

Practices identified in this section are also appropriate for implementation when managing the removal of accumulated precipitation (stormwater) from depressed areas at a construction site.

Stormwater mixed with non-stormwater or non-potable water should be managed as non-stormwater.

A clear water diversion is typically implemented where appropriate permits (401 Certification, 1602 Agreement, etc.) have been secured and work must be performed in a flowing stream or water body. If dewatering associated with a clear water diversion is required for your project, refer to Clear Water Diversion (NS-5).

Limitations

- Dewatering operations need to comply with applicable local and project-specific permits and regulations. In some areas, all dewatering activities require a dewatering permit.
- The discharge must be absent of pollutants in quantities that threaten to cause pollution or a nuisance.[1]
- The dewatering activity may only take place in an area without known soil and/or groundwater contamination (including, but not limited to information from: GeoTracker,[2]

[1] 40 Code of Federal Regulations section 131.12, and SWRCB Resolution No. 68-16.
[2] https://geotracker.waterboards.ca.gov/

local permitting authorities, RWQCBs, etc.) where that contamination could cause an exceedance of receiving water limitations.

- The dewatering activity must be in compliance with the receiving water limitations listed in General Permit, Section IV.D, including applicable TMDLs listed in Attachment H.
- Utilize outlet structures that withdraw water from the surface when conducting dewatering activity from sediment basins or similar impoundments, unless infeasible.
- Site conditions will dictate the design and use of dewatering operations.
- The controls discussed in this fact sheet primarily address sediment. Other secondary pollutant removal benefits are discussed where applicable.

Implementation

- Avoid dewatering discharges where possible by using the water, with appropriate approvals or permits, for onsite dust control, pumping to an onsite area for infiltration, disposing off, or site discharging to the sanitary sewer.
- Include dewatering monitoring in the Construction Site Monitoring Plan (CSMP) in the project Stormwater Pollution Prevention Plan (SWPPP).
- At least 24 hours prior to beginning a dewatering discharge notify the applicable RWQCB stormwater staff via email of the anticipated dewatering discharge. The general stormwater staff email addresses for each RWQCB may be found in Attachment C of the 2022 CGP or at the SWRCB website (https://www.waterboards.ca.gov/water_issues/programs/stormwater/contact.html).
- A separate notification is required if there are changes to the dewatering activities (SWRCB, 2024).
- Analyze the dewatering effluent for pH and turbidity at the discharge location within the first hour of discharge and daily for continuous dewatering discharges. Each sample must instantaneously comply with the NALs for pH (within 6.5-8.5 standard pH units) and turbidity (250 nephelometric turbidity units).
- Cease discharge when the NALs are exceeded in a single sample, as follows:
  - Through an automated sampling device capable of ceasing the discharge if a single sample concentration/level exceeds the NALs;
  - By a Qualified SWPPP Practitioner (QSP) or trained QSP-delegate who is present during the dewatering activity and can halt dewatering if a NAL is exceeded for a single sample;

  - If discharge cannot be ceased due to the need to protect human life or health or to prevent severe property damage, notify the RWQCB and local stormwater agency within 24 hours; or
  - If discharge that exceeds pH and turbidity NALs cannot be stopped, notify the RWQCB and local stormwater agency within 24 hours.

- Following the NAL exceedance the Qualified SWPPP Developer (QSD) will revise the SWPPP to incorporate corrective actions to prevent further exceedances, within 10 days of the exceedance.
- The SWRCB and RWQCB, upon written notice, may:
  - Require additional constituents to be monitored;
  - Require additional or more frequent monitoring;
  - Require additional or different sampling locations;
  - Require treatment of the discharge with ATS (in accordance with Attachment F of the General Permit; and/or
  - Revoke authorization of dewatering discharges under the General Permit and require separate NPDES permit coverage for dewatering discharges to Waters of the U.S.
- The destination of discharge from dewatering activities will typically determine the type of permit required for the discharge. For example, when discharging to a water of the U.S., a dewatering permit may be required through the site's governing RWQCB. When discharging to a sanitary sewer a permit may need to be obtained from the owner of the sanitary sewer. When discharging to a Municipal Separate Storm Sewer System (MS4) a permit from the MS4 may be needed in addition to obtaining an RWQCB dewatering permit. Additional permits or permissions from other agencies may be required for dewatering cofferdams or diversions.
- Dewatering discharges may not cause erosion at the discharge point. Potential BMPs to limit erosion include:
  - Directly piping discharge to a storm drain inlet or hardened channel,
  - Geotextiles and Mats (EC-7),
  - Velocity Dissipation Devices (EC-10), Slope Drains (EC-11), and
  - Check Dams (SE-4).
- Appropriate BMPs must be implemented to maintain compliance with all applicable permits.
- Per the requirements of Attachment J, the QSD must update the site-specific SWPPP onsite at least 24 hours prior to the beginning of a dewatering discharge and upload the amended

SWPPP to SMARTS within 14 days with current information required. The revised SWPPP must be uploaded as part of a Change of Information through SMARTS.

- Maintain dewatering records in accordance with all local and project-specific permits and regulations.

Inspection and Maintenance

- Inspect and verify that dewatering BMPs are in place and functioning prior to the commencement of activities requiring dewatering.
- Inspect dewatering BMPs daily while dewatering activities are being conducted.
- Inspect all equipment before use. Monitor dewatering operations to ensure they do not cause offsite discharge or erosion.
- Sample and monitor dewatering discharges as required by the General Permit.
- Unit-specific maintenance requirements are included with the description of each unit.
- Sediment removed during the maintenance of a dewatering device may be either spread onsite and stabilized or disposed of at a disposal site as approved by the owner and documented in the SWPPP.
- Sediment that is commingled with other pollutants will be disposed of in accordance with all applicable laws and regulations and as approved by the owner.

Sediment Removal

A variety of methods can be used to treat water during dewatering operations. Several devices are presented below and provide options to achieve sediment removal. The sediment particle size and permit or receiving water limitations on sediment or turbidity are key considerations for selecting sediment treatment option(s); in some cases, the use of multiple devices may be appropriate. Use of other enhanced treatment methods (i.e., introduction of chemicals or electric current to enhance flocculation and removal of sediment) must comply with: 1) for storm drain or surface water discharges, the requirements for ATS (see SE-11 and Attachment F of the General Permit); 2) for storm drain or surface water discharges, the requirements for Passive Treatment (see SE-15 and Attachment G of the General Permit); or 3) for sanitary sewer discharges, the requirements of applicable sanitary sewer discharge permits.

Sediment Basin (see also SE-2)

Description:

- A sediment basin is a temporary basin with a controlled release structure that is formed by excavation or construction of an embankment to detain sediment-laden runoff and allow sediment to settle out before discharging. Sediment basins are larger than Sediment Traps (SE-3) and have a designed outlet structure.

Appropriate Applications:

- Effective for the removal of trash, gravel, sand, silt, some metals that settle out with the sediment.

Implementation:

- Excavation and construction of related facilities is required.
- Temporary sediment basins should be fenced if safety is a concern.
- Outlet protection is required to prevent erosion at the outfall location.
- Discharges from sediment basins containing a skimmer or standpipe outlet structure that occur as a result of gravity flow with no mechanical pumping or syphoning, are not considered dewatering practices that would trigger the requirements of Attachment J.
- Discharges from sediment basins containing a skimmer or standpipe outlet structure that occur as a result of mechanical pumping or syphoning are considered dewatering practices that would trigger the requirements of Attachment J.

Maintenance:

- Maintenance is required for safety fencing, vegetation, embankment, inlet and outlet structures, as well as other features.
- Removal of sediment is required when the storage volume is reduced by one-third.

Sediment Trap (See also SE-3)

Description:

- A sediment trap is a temporary basin formed by excavation and/or construction of an earthen embankment across a waterway or low drainage area to detain sediment-laden runoff and allow sediment to settle out before discharging. Sediment traps are smaller than Sediment Basins (SE-2) and do not have a designed outlet (but do have a spillway or overflow).

Appropriate Applications:

- Effective for the removal of large and medium sized particles (sand and gravel) and some metals that settle out with the sediment.

Implementation:

- Excavation and construction of related facilities is required.
- Trap inlets should be located to maximize the travel distance to the trap outlet.
- Use rock or vegetation to protect the trap outlets against erosion.
- Discharges from sediment traps containing a skimmer or standpipe outlet structure that occur as a result of gravity flow with no mechanical pumping or syphoning are not considered dewatering practices that would trigger the requirements of Attachment J.
- Discharges from sediment traps containing a skimmer or standpipe outlet structure that occur as a result of mechanical pumping or syphoning are considered dewatering practices that would trigger the requirements of Attachment J.

Maintenance:

- Maintenance is required for vegetation, embankment, inlet and outfall structures, as well as other features.
- Removal of sediment is required when the storage volume is reduced by one-third.

Weir Tanks

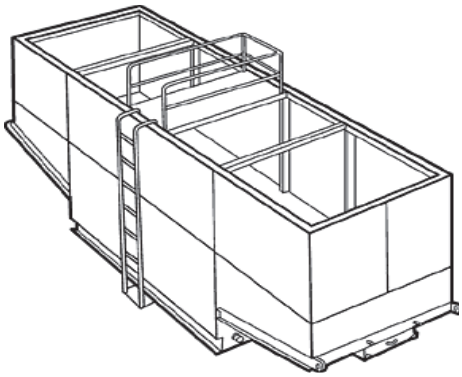

Description:

- A weir tank separates water and waste by using weirs. The configuration of the weirs (over and under weirs) maximizes the residence time in the tank and determines the waste to be removed from the water, such as oil, grease, and sediments.

Appropriate Applications:

- The tank removes trash, some settleable solids (gravel, sand, and silt), some visible oil and grease, and some metals (removed with sediment). To achieve high levels of flow, multiple tanks can be used in parallel. If additional treatment is desired, the tanks can be placed in series or as pre-treatment for other methods.

Implementation:

- Tanks are delivered to the site by the vendor, who can provide assistance with set-up and operation.
- Tank size will depend on flow volume, constituents of concern, and residency period required. Vendors should be consulted to appropriately size tank.
- Treatment capacity (i.e., volume and number of tanks) should provide at a minimum the required volume for discrete particle settling for treatment design flows.
- Discharges from weir tanks that occur as a result of gravity flow with no mechanical pumping or syphoning are not considered dewatering practices that would trigger the requirements of Attachment J.
- Discharges from weir tanks that occur as a result of mechanical pumping or syphoning are considered dewatering practices that would trigger the requirements of Attachment J.

Maintenance:

- Periodic cleaning is required based on visual inspection or reduced flow.

- Use a licensed waste disposal company to dispose of oil and grease.

Dewatering Tanks



Description:

- A dewatering tank removes debris and sediment. Flow enters the tank through the top, passes through a fabric filter, and is discharged through the bottom of the tank. The filter separates the solids from the liquids.

Appropriate Applications:

- The tank removes trash, gravel, sand, and silt, some visible oil and grease, and some metals (removed with sediment). To achieve high levels of flow, multiple tanks can be used in parallel. If additional treatment is desired, the tanks can be placed in series or as pre-treatment for other methods.

Implementation:

- Tanks are delivered to the site by the vendor, who can provide assistance with set-up and operation.
- Tank size will depend on flow volume, constituents of concern, and residency period required. Vendors should be consulted to appropriately size tank.
- Discharges from dewatering tanks through mechanical pumping or syphoning are considered dewatering practices that would trigger the requirements of Attachment J.

Maintenance:

- Periodic cleaning is required based on visual inspection or reduced flow.
- Use a licensed waste disposal company to dispose of oil and grease.

Gravity Bag Filter

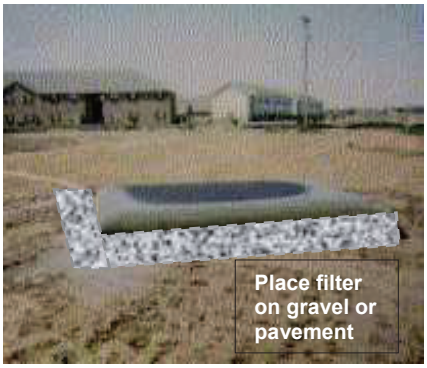

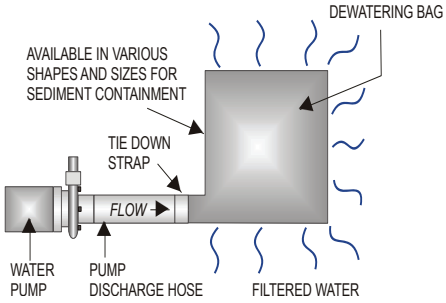

Description:

- A gravity bag filter, also referred to as a dewatering bag, is a square or rectangular bag made of non-woven geotextile fabric that collects gravel, sand, silt, and fines.

Appropriate Applications:

- Effective for the removal of sediments (gravel, sand, and silt). Gravity bag filters may be ineffective for the removal of fines and clays, especially in the initial stages of discharge.
- Some metals are removed with the sediment.

Implementation:

- Water is pumped into one side of the bag and seeps through the top, bottom, and sides of the bag.
- Place the filter bag on pavement or a gravel bed or paved surface. Avoid placing a dewatering bag on unprotected bare soil. If placing the bag on bare soil is unavoidable, a secondary barrier should be used, such as a rock filter bed placed beneath and beyond the edges of the bag to prevent erosion and capture sediments that escape the bag.
- Implement perimeter controls around the downstream end of the bag. Secondary sediment controls are important especially in the initial stages of discharge, which tend to allow fines to pass through the bag.
- Discharges from filter bags through gravity flow are not considered dewatering practices that would trigger the requirements of Attachment J.

Maintenance:

- Inspections of the flow conditions, bag condition, bag capacity, and the secondary barrier (as applicable) are required as per the manufacturer's recommendation.
- Replace the bag when it no longer filters sediment or passes water at a reasonable rate.
- Caution should be taken when removing and disposing of the bag, to prevent the release of captured sediment.

- Properly dispose of the bag offsite. If sediment is removed from the bag prior to disposal (bags can potentially be reused depending upon their condition), dispose of sediment in accordance with the general maintenance procedures described in this BMP Fact Sheet.

Sand Media Particulate Filter





Description:

- Water is treated by passing it through canisters filled with sand media. Generally, sand filters provide a final level of treatment. They are often used as a secondary or higher level of treatment after a significant amount of sediment and other pollutants have been removed using other methods.

Appropriate Applications:

- Effective for the removal of trash, gravel, sand, and silt, and some metals, as well as the reduction of biochemical oxygen demand (BOD) and turbidity.
- Sand filters can be used for stand-alone treatment or in conjunction with bag and cartridge filtration if further treatment is required.
- Sand filters can also be used to provide additional treatment to water treated via settling or basic filtration.

Implementation:

- The filters require delivery to the site and initial set up. The vendor can provide assistance with installation and operation.
- Discharges from sand filters through mechanical pumping or syphoning are considered dewatering practices that would trigger the requirements of Attachment J.

Maintenance:

- The filters require regular service to monitor and maintain the level of the sand media. If subjected to high loading rates, filters can plug quickly.
- Vendors generally provide data on maximum head loss through the filter. Monitor the filter daily while in use and cleaned when head loss reaches target levels.

- If cleaned by backwashing, the backwash water may need to be hauled away for disposal or returned to the upper end of the treatment train for another pass through the series of dewatering BMPs.

Pressurized Bag Filter





Description:

- A pressurized bag filter is a unit composed of single filter bags made from polyester felt material. The water filters through the unit and is discharged through a header. Vendors provide bag filters in a variety of configurations. Some units include a combination of bag filters and cartridge filters for enhanced contaminant removal.

Appropriate Applications:

- Effective for the removal of sediment (sand and silt) and some metals, as well as the reduction of BOD, turbidity, and hydrocarbons. Oil absorbent bags are available for hydrocarbon removal.

- Filters can be used to provide secondary treatment to water treated via settling or basic filtration.

Implementation:

- The filters require delivery to the site and initial set up. The vendor can provide assistance with installation and operation.

- Discharges from pressurized bag filter through mechanical pumping or syphoning are considered dewatering practices that would trigger the requirements of Attachment J.

Maintenance:

- The filter bags require replacement when the pressure differential equals or exceeds the manufacturer's recommendation.

Cartridge Filter



Description:

- Cartridge filters provide a high degree of pollutant removal by utilizing a number of individual cartridges as part of a larger filtering unit. They are often used as a secondary or higher (polishing) level of treatment after a significant amount of sediment and other pollutants are removed. Units come with various cartridge configurations (for use in series with bag filters) or with a larger single cartridge filtration unit (with multiple filters within).

Appropriate Applications:

- Effective for the removal of sediment (sand, silt, and some clays) and metals, as well as the reduction of BOD, turbidity, and hydrocarbons. Hydrocarbons can effectively be removed with special resin cartridges.
- Filters can be used to provide secondary treatment to water treated via settling or basic filtration.

Implementation:

- The filters require delivery to the site and initial set up. The vendor can provide assistance.
- Discharges from cartridge filters through mechanical pumping or syphoning are considered dewatering practices that would trigger the requirements of Attachment J.

Maintenance:

- The cartridges require replacement when the pressure differential equals or exceeds the manufacturer's recommendation.

References and Additional Resources

California Department of Transportation (Caltrans). 2024. Construction Site Best Management Practices (BMPs) Manual CTSW-RT-24-425.11.1.

California State Water Resources Control Board (SWRCB). 2022. Order 2022-0057-DWQ, NPDES General Permit No. CAS000002: National Pollutant Discharge Elimination System (NDPES) General Permit for Stormwater Discharges Associated with Construction and Land Disturbance Activities (General Permit).

California State Water Resources Control Board (SWRCB). 2024. Dewatering Discharge Notification Guidance available at https://www.waterboards.ca.gov/water_issues/programs/stormwater/construction.html

U.S. Environmental Protection Agency (EPA). 2007. Developing Your Pollution Prevention Plan, EPA 833-R-06-004.

Paving and Grinding Operations NS-3

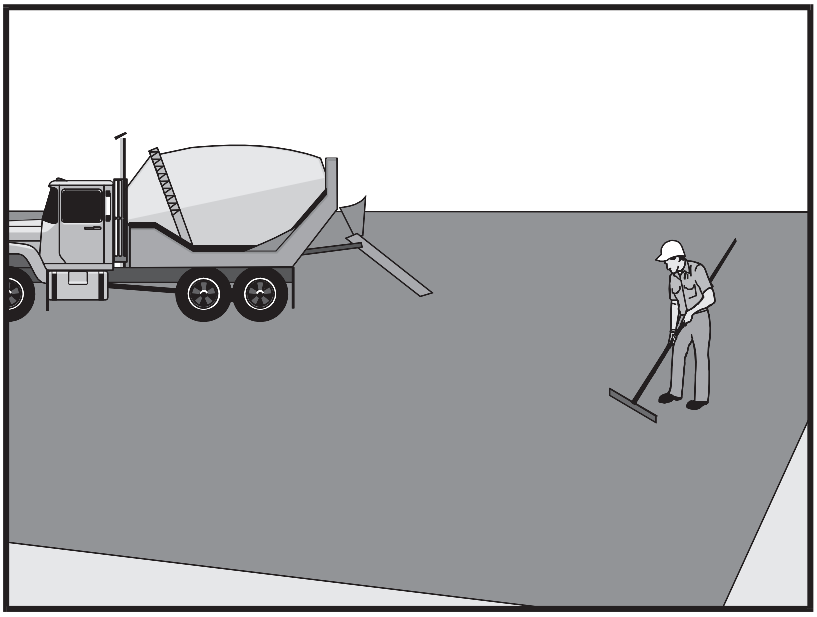

Categories

EC	Erosion Control	
SE	Sediment Control	
TC	Tracking Control	
WE	Wind Erosion Control	
NS	Non-Stormwater Management Control	☑
WM	Waste Management and Materials Pollution Control	☒

Legend:

☑ **Primary Category**

☒ **Secondary Category**

Targeted Constituents

Sediment	☑
Nutrients	
Trash	
Metals	
Bacteria	
Oil and Grease	☑
Organics	

Potential Alternatives

None

Copyright 2026 by the California Stormwater Quality Association

Description and Purpose

Prevent or reduce the discharge of pollutants from paving operations, using measures to prevent runon and runoff pollution, properly disposing of wastes, and training employees and subcontractors.

The General Permit incorporates Numeric Action Levels (NAL) for pH and turbidity (see Section 2 of this handbook to determine your project's risk level and if you are subject to these requirements).

Many types of construction materials associated with paving and grinding operations, including mortar, concrete, and cement and their associated wastes have basic chemical properties that can raise pH levels outside of the permitted range. Additional care should be taken when managing these materials to prevent them from coming into contact with stormwater flows, which could lead to exceedances of the General Permit requirements.

Suitable Applications

These procedures are implemented where paving, surfacing, resurfacing, or sawcutting, may pollute stormwater runoff or discharge to the storm drain system or watercourses.

Limitations

- Paving opportunities may be limited during wet weather.
- Discharges of freshly paved surfaces may raise pH to environmentally harmful levels and trigger permit violations.

Implementation

General

- Avoid paving during the wet season when feasible.
- Reschedule paving and grinding activities if rain is forecasted.
- Train employees and sub-contractors in pollution prevention and reduction.
- Store materials away from drainage courses to prevent stormwater runon (see WM-1, Material Delivery and Storage).
- Protect drainage courses, particularly in areas with a grade, by employing BMPs to divert runoff or to trap and filter sediment.
- Stockpile material removed from roadways away from drain inlets, drainage ditches, and watercourses. These materials should be stored consistent with WM-3, Stockpile Management.
- Disposal of PCC (Portland cement concrete) and AC (asphalt concrete) waste should be in conformance with WM-8, Concrete Waste Management.

Saw Cutting, Grinding, and Pavement Removal

- Shovel or vacuum saw-cut slurry and remove from site. Cover or barricade storm drains during saw cutting to contain slurry.
- When paving involves AC, the following steps should be implemented to prevent the discharge of grinding residue, uncompacted or loose AC, tack coats, equipment cleaners, or unrelated paving materials:
    - AC grindings, pieces, or chunks used in embankments or shoulder backing should not be allowed to enter any storm drains or watercourses. Install inlet protection and perimeter controls until area is stabilized (i.e. cutting, grinding or other removal activities are complete and loose material has been properly removed and disposed of)or permanent controls are in place. Examples of temporary perimeter controls can be found in EC-9, Earth Dikes and Drainage Swales; SE-1, Silt Fence; SE-5, Fiber Rolls, or SE-13 Compost Socks and Berms
    - Collect and remove all broken asphalt and recycle when practical. Old or spilled asphalt should be recycled or disposed of properly.
- Do not allow saw-cut slurry to enter storm drains or watercourses. Residue from grinding operations should be picked up by a vacuum attachment to the grinding machine, or by sweeping, should not be allowed to flow across the pavement, and should not be left on the

surface of the pavement. See also WM-8, Concrete Waste Management, and WM-10, Liquid Waste Management.

- Pavement removal activities should not be conducted in the rain.
- Collect removed pavement material by mechanical or manual methods. This material may be recycled for use as shoulder backing or base material.
- If removed pavement material cannot be recycled, transport the material back to an approved storage site.

Asphaltic Concrete Paving

- If paving involves asphaltic cement concrete, follow these steps:
  - Do not allow sand or gravel placed over new asphalt to wash into storm drains, streets, or creeks. Vacuum or sweep loose sand and gravel and properly dispose of this waste by referring to WM-5, Solid Waste Management.
  - Old asphalt should be disposed of properly. Collect and remove all broken asphalt from the site and recycle whenever possible.

Portland Cement Concrete Paving

- Do not wash sweepings from exposed aggregate concrete into a storm drain system. Collect waste materials by dry methods, such as sweeping or shoveling, and return to aggregate base stockpile or dispose of properly. Allow aggregate rinse to settle. Then, either allow rinse water to dry in a temporary pit as described in WM-8, Concrete Waste Management, or pump the water to the sanitary sewer if authorized by the local wastewater authority.

Sealing Operations

- During chip seal application and sweeping operations, petroleum or petroleum covered aggregate should not be allowed to enter any storm drain or water courses. Apply temporary perimeter controls until structure is stabilized (i.e. all sealing operations are complete and cured and loose materials have been properly removed and disposed).
- Inlet protection (SE-10, Storm Drain Inlet Protection) should be used during application of seal coat, tack coat, slurry seal, and fog seal.
- Seal coat, tack coat, slurry seal, or fog seal should not be applied if rainfall is predicted to occur during the application or curing period.

Paving Equipment

- Leaks and spills from paving equipment can contain toxic levels of heavy metals and oil and grease. Place drip pans or absorbent materials under paving equipment when not in use. Clean up spills with absorbent materials and dispose of in accordance with the applicable regulations. See NS-10, Vehicle and Equipment Maintenance, WM-4, Spill Prevention and Control, and WM-10, Liquid Waste Management.
- Substances used to coat asphalt transport trucks and asphalt spreading equipment should not contain soap and should be non-foaming and non-toxic.

- Paving equipment parked onsite should be parked over plastic to prevent soil contamination.
- Clean asphalt coated equipment offsite whenever possible. When cleaning dry, hardened asphalt from equipment, manage hardened asphalt debris as described in WM-5, Solid Waste Management. Any cleaning onsite should follow NS-8, Vehicle and Equipment Cleaning.

Thermoplastic Striping

- Thermoplastic striper and pre-heater equipment shutoff valves should be inspected to ensure that they are working properly to prevent leaking thermoplastic from entering drain inlets, the stormwater drainage system, or watercourses.
- Pre-heaters should be filled carefully to prevent splashing or spilling of hot thermoplastic. Leave six inches of space at the top of the pre-heater container when filling thermoplastic to allow room for material to move.
- Do not pre-heat, transfer, or load thermoplastic near drain inlets or watercourses.
- Clean truck beds daily of loose debris and melted thermoplastic. When possible, recycle thermoplastic material.

Raised/Recessed Pavement Marker Application and Removal

- Do not transfer or load bituminous material near drain inlets, the stormwater drainage system, or watercourses.
- Melting tanks should be loaded with care and not filled to beyond six inches from the top to leave room for splashing.
- When servicing or filling melting tanks, ensure all pressure is released before removing lids to avoid spills.
- On large-scale projects, use mechanical or manual methods to collect excess bituminous material from the roadway after removal of markers.

Inspection and Maintenance

- Inspect and verify that activity-based BMPs are in place prior to the commencement of paving and grinding operations.
- BMPs must be inspected in accordance with General Permit requirements for the associated project type and risk level. It is recommended that at a minimum, BMPs be inspected weekly, prior to forecasted rain events, daily during extended rain events, and after the conclusion of rain events.
- Sample stormwater runoff required by the General Permit.
- Keep ample supplies of drip pans or absorbent materials onsite.
- Inspect and maintain machinery regularly to minimize leaks and drips.

References and Additional Resources

Blueprint for a Clean Bay: Best Management Practices to Prevent Stormwater Pollution from Construction Related Activities; Santa Clara Valley Nonpoint Source Pollution Control Program, 1995.

Construction Site Best Management Practices (BMPs) Manual, CTSW-RT-24-425.11.1, California Department of Transportation (Caltrans), March 2024.

Hot Mix Asphalt-Paving Handbook AC 150/5370-14, Appendix I, U.S. Army Corps of Engineers, July 1991.

Erosion and Sediment Control Manual, Oregon Department of Environmental Quality, February 2005.

Illicit Connection/Discharge NS-6

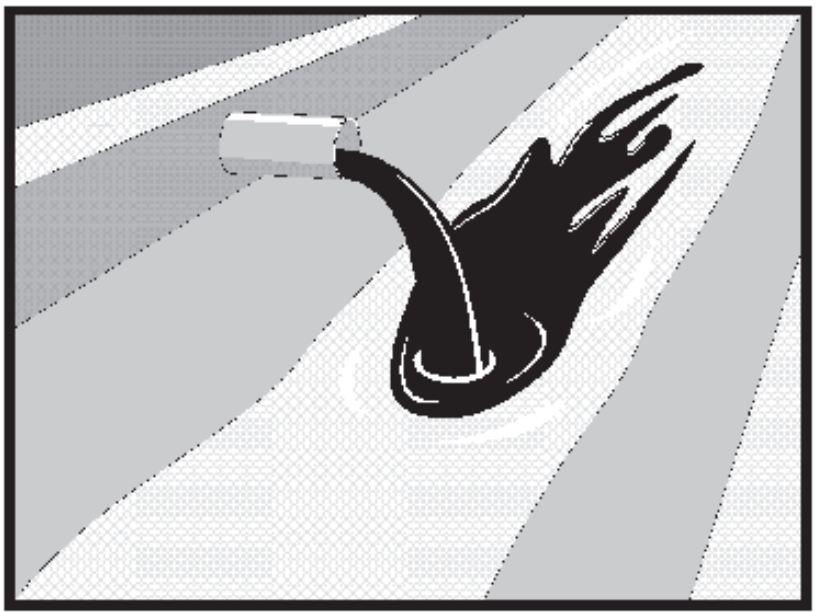

Categories

EC	Erosion Control	
SE	Sediment Control	
TC	Tracking Control	
WE	Wind Erosion Control	
NS	Non-Stormwater Management Control	☑
WM	Waste Management and Materials Pollution Control	

Legend:

☑ **Primary Objective**

☒ **Secondary Objective**

Targeted Constituents

Sediment	
Nutrients	☑
Trash	☑
Metals	☑
Bacteria	☑
Oil and Grease	☑
Organics	☑

Potential Alternatives

None

Copyright 2026 by the California Stormwater Quality Association

Description and Purpose

Procedures and practices designed for construction contractors to recognize illicit connections or illegally dumped or discharged materials on a construction site and report incidents.

Suitable Applications

This best management practice (BMP) applies to all construction projects. Illicit connection/discharge and reporting is applicable anytime an illicit connection or discharge is discovered, or illegally dumped material is found on the construction site.

Limitations

Illicit connections and illegal discharges or dumping, for the purposes of this BMP, refer to discharges and dumping caused by parties other than the contractor. If pre-existing hazardous materials or wastes are known to exist onsite, they should be identified in the SWPPP and handled as set forth in the SWPPP.

Implementation

Planning

- Review the SWPPP. Pre-existing areas of contamination should be identified and documented in the SWPPP.
- Inspect site before beginning the job for evidence of illicit connections, illegal dumping or discharges. Document any pre-existing conditions and notify the owner.

CASQA
CALIFORNIA STORMWATER QUALITY ASSOCIATION®

- Inspect site regularly during project execution for evidence of illicit connections, illegal dumping or discharges.
- Observe site perimeter for evidence for potential of illicitly discharged or illegally dumped material, which may enter the job site.

Identification of Illicit Connections and Illegal Dumping or Discharges

- **General –** unlabeled and unidentifiable material should be treated as hazardous.
- **Solids** - Look for debris, or rubbish piles. Solid waste dumping often occurs on roadways with light traffic loads or in areas not easily visible from the traveled way.
- **Liquids** - signs of illegal liquid dumping or discharge can include:
  - Visible signs of staining or unusual colors to the pavement or surrounding adjacent soils
  - Pungent odors coming from the drainage systems
  - Discoloration or oily substances in the water or stains and residues detained within ditches, channels or drain boxes
  - Abnormal water flow during the dry weather season
- **Urban Areas** - Evidence of illicit connections or illegal discharges is typically detected at storm drain outfall locations or at manholes. Signs of an illicit connection or illegal discharge can include:
  - Abnormal water flow during the dry weather season
  - Unusual flows in sub drain systems used for dewatering
  - Pungent odors coming from the drainage systems
  - Discoloration or oily substances in the water or stains and residues detained within ditches, channels or drain boxes
  - Excessive sediment deposits, particularly adjacent to or near active offsite construction projects
- **Rural Areas** - Illicit connections or illegal discharges involving irrigation drainage ditches are detected by visual inspections. Signs of an illicit discharge can include:
  - Abnormal water flow during the non-irrigation season
  - Non-standard junction structures
  - Broken concrete or other disturbances at or near junction structures

Reporting

Notify the owner of any illicit connections and illegal dumping or discharge incidents at the time of discovery. For illicit connections or discharges to the storm drain system, notify the local stormwater management agency. For illegal dumping, notify the local law enforcement agency.

Cleanup and Removal

The responsibility for cleanup and removal of illicit or illegal dumping or discharges will vary by location. Contact the local stormwater management agency for further information.

Inspection and Maintenance

- Inspect and verify that activity-based BMPs are in place prior to the commencement of associated activities. While activities associated with the BMP are under way, inspect BMPs in accordance with General Permit requirements for the associated project type and risk level. It is recommended that at a minimum, BMPs be inspected weekly, prior to forecasted rain events, daily during extended rain events, and after the conclusion of rain events.
- Inspect the site regularly to check for any illegal dumping or discharge.
- Prohibit employees and subcontractors from disposing of non-job-related debris or materials at the construction site.
- Notify the owner of any illicit connections and illegal dumping or discharge incidents at the time of discovery.

References and Additional Resources

Construction Site Best Management Practices (BMPs) Manual, CTSW-RT-24-425.11.1, California Department of Transportation (Caltrans), March 2024.

Blueprint for a Clean Bay: Best Management Practices to Prevent Stormwater Pollution from Construction Related Activities; Santa Clara Valley Nonpoint Source Pollution Control Program, 1995.

Stormwater Management for Construction Activities, Developing Pollution Prevention Plans and Best Management Practices, EPA 832-R-92005; USEPA, April 1992.

Vehicle and Equipment Cleaning NS-8

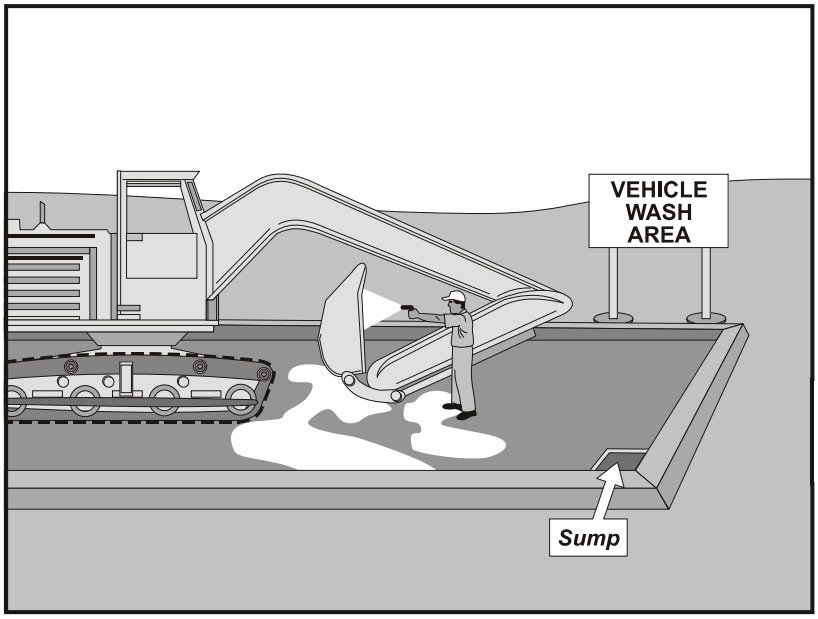

Categories

EC	Erosion Control	
SE	Sediment Control	
TC	Tracking Control	
WE	Wind Erosion Control	
NS	Non-Stormwater Management Control	☑
WM	Waste Management and Materials Pollution Control	

Legend:

☑ **Primary Objective**

☒ **Secondary Objective**

Targeted Constituents

Sediment	☑
Nutrients	☑
Trash	
Metals	
Bacteria	
Oil and Grease	☑
Organics	☑

Potential Alternatives

None

Copyright 2026 by the California Stormwater Quality Association

Description and Purpose

Vehicle and equipment cleaning procedures and practices eliminate or reduce the discharge of pollutants to stormwater from vehicle and equipment cleaning operations. Procedures and practices include but are not limited to: using offsite facilities; washing in designated, contained areas only; eliminating discharges to the storm drain by infiltrating the wash water; and training employees and subcontractors in proper cleaning procedures.

Suitable Applications

These procedures are suitable on all construction sites where vehicle and equipment cleaning is performed.

Limitations

Even phosphate-free, biodegradable soaps have been shown to be toxic to fish before the soap degrades. Sending vehicles/equipment offsite should be done in conjunction with TC-1, Stabilized Construction Entrance/Exit.

Implementation

Other options to washing equipment onsite include contracting with either an offsite or mobile commercial washing business. These businesses may be better equipped to handle and dispose of the wash waters properly. Performing this work offsite can also be economical by eliminating the need for a separate washing operation onsite.

If washing operations are to take place onsite, then:

- Use phosphate-free, biodegradable soaps.
- Educate employees and subcontractors on pollution prevention measures.
- Do not permit steam cleaning onsite. Steam cleaning can generate significant pollutant concentrates.
- Cleaning of vehicles and equipment with soap, solvents or steam should not occur on the project site unless resulting wastes are fully contained and disposed of. Resulting wastes should not be discharged or buried and must be captured and recycled or disposed according to the requirements of WM-10, Liquid Waste Management or WM-6, Hazardous Waste Management, depending on the waste characteristics. Minimize use of solvents. Use of diesel for vehicle and equipment cleaning is prohibited.
- All vehicles and equipment that regularly enter and leave the construction site must be cleaned offsite.
- When vehicle and equipment washing and cleaning must occur onsite, and the operation cannot be located within a structure or building equipped with appropriate disposal facilities, the outside cleaning area should have the following characteristics:
  - Located away from storm drain inlets, drainage facilities, or watercourses
  - Paved with concrete or asphalt and bermed to contain wash waters and to prevent runon and runoff
  - Configured with a sump to allow collection and disposal of wash water
  - No discharge of wash waters to storm drains or watercourses
  - Used only when necessary
- When cleaning vehicles and equipment with water:
  - Use as little water as possible. High-pressure sprayers may use less water than a hose and should be considered
  - Use positive shutoff valve to minimize water usage
  - Facility wash racks should discharge to a sanitary sewer, recycle system or other approved discharge system and must not discharge to the storm drainage system, watercourses, or to groundwater

Inspection and Maintenance

- Inspect and verify that activity-based BMPs are in place prior to the commencement of associated activities. While activities associated with the BMP are under way, inspect BMPs in accordance with General Permit requirements for the associated project type and risk level. It is recommended that at a minimum, BMPs be inspected weekly, prior to forecasted rain events, daily during extended rain events, and after the conclusion of rain events.

- Inspect BMPs subject to non-stormwater discharges daily while non-stormwater discharges occur.
- Inspection and maintenance are minimal, although some berm repair may be necessary.
- Monitor employees and subcontractors throughout the duration of the construction project to ensure appropriate practices are being implemented.
- Inspect sump regularly and remove liquids and sediment as needed.
- Prohibit employees and subcontractors from washing personal vehicles and equipment on the construction site.

References and Additional Resources

Construction Site Best Management Practices (BMPs) Manual, CTSW-RT-24-425.11.1, California Department of Transportation (Caltrans), March 2024.

Swisher, R.D. Surfactant Biodegradation, Marcel Decker Corporation, 1987.

Vehicle and Equipment Fueling NS-9

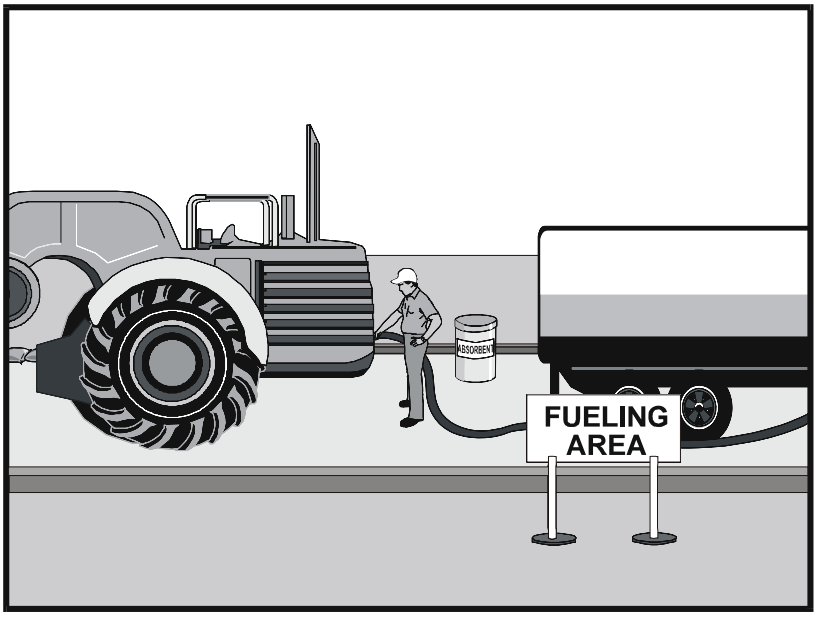

Categories

EC	Erosion Control	
SE	Sediment Control	
TC	Tracking Control	
WE	Wind Erosion Control	
NS	Non-Stormwater Management Control	☑
WM	Waste Management and Materials Pollution Control	

Legend:

☑ **Primary Objective**

☒ **Secondary Objective**

Targeted Constituents

Sediment	
Nutrients	
Trash	
Metals	
Bacteria	
Oil and Grease	☑
Organics	

Potential Alternatives

None

Copyright 2026 by the California Stormwater Quality Association

Description and Purpose

Vehicle equipment fueling procedures and practices are designed to prevent fuel spills and leaks and reduce or eliminate contamination of stormwater. This can be accomplished by using offsite facilities, fueling in designated areas only, enclosing or covering stored fuel, implementing spill controls, and training employees and subcontractors in proper fueling procedures.

Suitable Applications

These procedures are suitable on all construction sites where vehicle and equipment fueling takes place.

Limitations

Onsite vehicle and equipment fueling should only be used where it is impractical to send vehicles and equipment offsite for fueling. Sending vehicles and equipment offsite should be done in conjunction with TC-1, Stabilized Construction Entrance/ Exit.

Implementation

- Use offsite fueling stations as much as possible. These businesses are better equipped to handle fuel and spills properly. Performing this work offsite can also be economical by eliminating the need for a separate fueling area at a site.
- Discourage “topping-off” of fuel tanks.

CASQA
CALIFORNIA STORMWATER QUALITY ASSOCIATION®

- Absorbent spill cleanup materials and spill kits should be available in fueling areas and on fueling trucks and should be disposed of properly after use.
- Drip pans or absorbent pads should be used during vehicle and equipment fueling, unless the fueling is performed over an impermeable surface in a dedicated fueling area.
- Use absorbent materials on small spills. Do not hose down or bury the spill. Remove the adsorbent materials promptly and dispose of properly.
- Avoid mobile fueling of mobile construction equipment around the site; rather, transport the equipment to designated fueling areas. With the exception of tracked equipment such as bulldozers and large excavators, most vehicles should be able to travel to a designated area with little lost time.
- Train employees and subcontractors in proper fueling and cleanup procedures.
- When fueling must take place onsite, designate an area away from drainage courses to be used. Fueling areas should be identified in the SWPPP.
- Dedicated fueling areas should be protected from stormwater runon and runoff and should be located at least 50 ft away from downstream drainage facilities and watercourses. Fueling must be performed on level-grade areas.
- Protect fueling areas with berms and dikes to prevent runon, runoff, and to contain spills.
- Nozzles used in vehicle and equipment fueling should be equipped with an automatic shutoff to control drips. Fueling operations should not be left unattended.
- Use vapor recovery nozzles to help control drips as well as air pollution where required by Air Quality Management Districts (AQMD).
- Federal, state, and local requirements should be observed for any stationary above ground storage tanks.

Inspection and Maintenance

- Inspect BMPs in accordance with General Permit requirements for the associated project type and risk level. It is recommended that at a minimum, BMPs be inspected weekly, prior to forecasted rain events, daily during extended rain events, and after the conclusion of rain events.
- Vehicles and equipment should be inspected each day of use for leaks. Leaks should be repaired immediately, or problem vehicles or equipment should be removed from the project site.
- Keep ample supplies of spill cleanup materials onsite.
- Immediately clean up spills and properly dispose of contaminated soil and cleanup materials.

References and Additional Resources

Construction Site Best Management Practices (BMPs) Manual, CTSW-RT-24-425.11.1, California Department of Transportation (Caltrans), March 2024.

Blueprint for a Clean Bay: Best Management Practices to Prevent Stormwater Pollution from Construction Related Activities; Santa Clara Valley Nonpoint Source Pollution Control Program, 1995.

Coastal Nonpoint Pollution Control Program: Program Development and Approval Guidance, Working Group Working Paper; USEPA, April 1992.

Stormwater Management for Construction Activities, Developing Pollution Prevention Plans and Best Management Practices, EPA 832-R-92005; USEPA, April 1992.

Vehicle & Equipment Maintenance NS-10

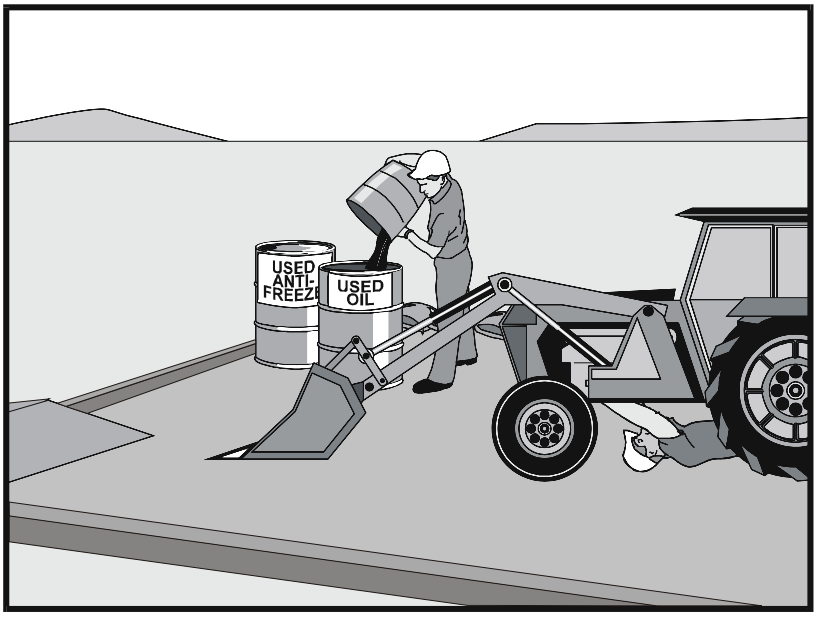

Categories

EC	Erosion Control	
SE	Sediment Control	
TC	Tracking Control	
WE	Wind Erosion Control	
NS	Non-Stormwater Management Control	☑
WM	Waste Management and Materials Pollution Control	

Legend:

☑ **Primary Objective**

☒ **Secondary Objective**

Targeted Constituents

Sediment	
Nutrients	☑
Trash	☑
Metals	
Bacteria	
Oil and Grease	☑
Organics	☑

Potential Alternatives

None

Copyright 2026 by the California Stormwater Quality Association

Description and Purpose

Prevent or reduce the contamination of stormwater resulting from vehicle and equipment maintenance by running a "dry and clean site". The best option would be to perform maintenance activities at an offsite facility. If this option is not available then work should be performed in designated areas only, while providing cover for materials stored outside, checking for leaks and spills, and containing and cleaning up spills immediately. Employees and subcontractors must be trained in proper procedures.

Suitable Applications

These procedures are suitable on all construction projects where an onsite yard area is necessary for storage and maintenance of heavy equipment and vehicles.

Limitations

Onsite vehicle and equipment maintenance should only be used where it is impractical to send vehicles and equipment offsite for maintenance and repair. Sending vehicles/equipment offsite should be done in conjunction with TC-1, Stabilized Construction Entrance/Exit.

Outdoor vehicle or equipment maintenance is a potentially significant source of stormwater pollution. Activities that can contaminate stormwater include engine repair and service, changing or replacement of fluids, and outdoor equipment storage and parking (engine fluid leaks). For further information on vehicle or equipment servicing, see NS-8,

CASQA
CALIFORNIA STORMWATER QUALITY ASSOCIATION®

Vehicle and Equipment Cleaning, and NS-9, Vehicle and Equipment Fueling.

Implementation

- Use offsite repair shops as much as possible. These businesses are better equipped to handle vehicle fluids and spills properly. Performing this work offsite can also be economical by eliminating the need for a separate maintenance area.
- If maintenance must occur onsite, use designated areas, located away from drainage courses. Dedicated maintenance areas should be protected from stormwater runon and runoff and should be located at least 50 ft from downstream drainage facilities and watercourses.
- Drip pans or absorbent pads should be used during vehicle and equipment maintenance work that involves fluids, unless the maintenance work is performed over an impermeable surface in a dedicated maintenance area.
- Place a stockpile of spill cleanup materials where it will be readily accessible.
- All fueling trucks and fueling areas are required to have spill kits and/or use other spill protection devices.
- Use adsorbent materials on small spills. Remove the absorbent materials promptly and dispose of properly.
- Inspect onsite vehicles and equipment daily at startup for leaks, and repair immediately.
- Keep vehicles and equipment clean; do not allow excessive build-up of oil and grease.
- Segregate and recycle wastes, such as greases, used oil or oil filters, antifreeze, cleaning solutions, automotive batteries, hydraulic and transmission fluids. Provide secondary containment and covers for these materials if stored onsite.
- Train employees and subcontractors in proper maintenance and spill cleanup procedures.
- Drip pans or plastic sheeting should be placed under all vehicles and equipment placed on docks, barges, or other structures over water bodies when the vehicle or equipment is planned to be idle for more than 1 hour.
- For long-term projects, consider using portable tents or covers over maintenance areas if maintenance cannot be performed offsite.
- Consider use of new, alternative greases and lubricants, such as adhesive greases, for chassis lubrication and fifth-wheel lubrication.
- Properly dispose of used oils, fluids, lubricants, and spill cleanup materials.
- Do not place used oil in a dumpster or pour into a storm drain or watercourse.
- Properly dispose of or recycle used batteries.
- Do not bury used tires.

- Repair leaks of fluids and oil immediately.

Listed below is further information if you must perform vehicle or equipment maintenance onsite.

Safer Alternative Products

- Consider products that are less toxic or hazardous than regular products. These products are often sold under an "environmentally friendly" label.
- Consider use of grease substitutes for lubrication of truck fifth-wheels. Follow manufacturers label for details on specific uses.
- Consider use of plastic friction plates on truck fifth-wheels in lieu of grease. Follow manufacturers label for details on specific uses.

Waste Reduction

Parts are often cleaned using solvents such as trichloroethylene, trichloroethane, or methylene chloride. Many of these cleaners are listed in California Toxic Rule as priority pollutants. These materials are harmful and must not contaminate stormwater. They must be disposed of as a hazardous waste. Reducing the number of solvents makes recycling easier and reduces hazardous waste management costs. Often, one solvent can perform a job as well as two different solvents. Also, if possible, eliminate or reduce the amount of hazardous materials and waste by substituting non-hazardous or less hazardous materials. For example, replace chlorinated organic solvents with non-chlorinated solvents. Non-chlorinated solvents like kerosene or mineral spirits are less toxic and less expensive to dispose of properly. Check the list of active ingredients to see whether it contains chlorinated solvents. The "chlor" term indicates that the solvent is chlorinated. Also, try substituting a wire brush for solvents to clean parts.

Recycling and Disposal

Separating wastes allows for easier recycling and may reduce disposal costs. Keep hazardous wastes separate, do not mix used oil solvents, and keep chlorinated solvents (like,-trichloroethane) separate from non-chlorinated solvents (like kerosene and mineral spirits). Promptly transfer used fluids to the proper waste or recycling drums. Don't leave full drip pans or other open containers lying around. Provide cover and secondary containment until these materials can be removed from the site.

Oil filters can be recycled. Ask your oil supplier or recycler about recycling oil filters.

Do not dispose of extra paints and coatings by dumping liquid onto the ground or throwing it into dumpsters. Allow coatings to dry or harden before disposal into covered dumpsters.

Store cracked batteries in a non-leaking secondary container. Do this with all cracked batteries, even if you think all the acid has drained out. If you drop a battery, treat it as if it is cracked. Put it into the containment area until you are sure it is not leaking.

Inspection and Maintenance

- Inspect and verify that activity-based BMPs are in place prior to the commencement of associated activities. While activities associated with the BMP are under way, inspect BMPs

in accordance with General Permit requirements for the associated project type and risk level. It is recommended that at a minimum, BMPs be inspected weekly, prior to forecasted rain events, daily during extended rain events, and after the conclusion of rain events.

- Inspect BMPs subject to non-stormwater discharges daily while non-stormwater discharges occur.
- Keep ample supplies of spill cleanup materials onsite.
- Maintain waste fluid containers in leak proof condition.
- Vehicles and equipment should be inspected on each day of use. Leaks should be repaired immediately, or the problem vehicle(s) or equipment should be removed from the project site.
- Inspect equipment for damaged hoses and leaky gaskets routinely. Repair or replace as needed.

References and Additional Resources

Construction Site Best Management Practices (BMPs) Manual, CTSW-RT-24-425.11.1, California Department of Transportation (Caltrans), March 2024.

Blueprint for a Clean Bay: Best Management Practices to Prevent Stormwater Pollution from Construction Related Activities; Santa Clara Valley Nonpoint Source Pollution Control Program, 1995.

Coastal Nonpoint Pollution Control Program; Program Development and Approval Guidance, Working Group, Working Paper; USEPA, April 1992.

Concrete Curing NS-12

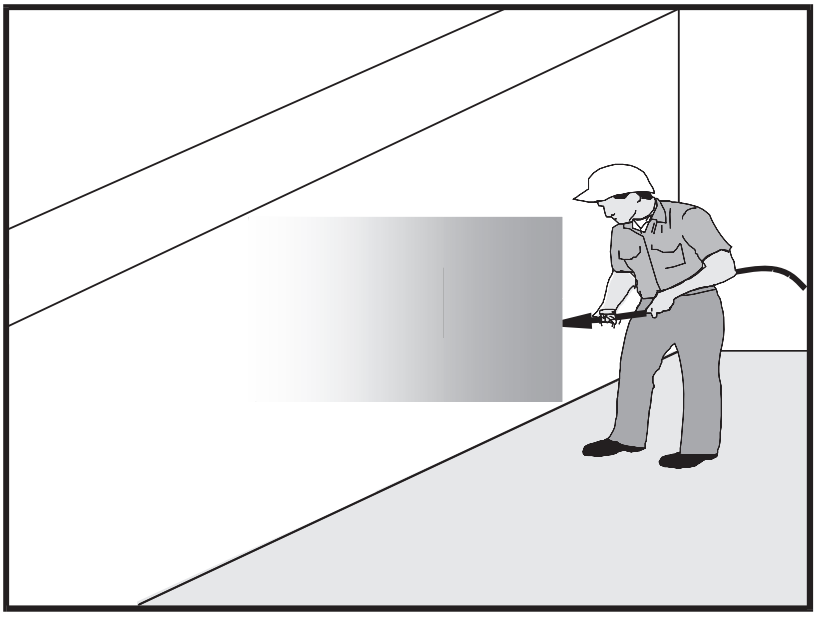

Categories

EC	Erosion Control	
SE	Sediment Control	
TC	Tracking Control	
WE	Wind Erosion Control	
NS	Non-Stormwater Management Control	☑
WM	Waste Management and Materials Pollution Control	☑

Legend:

☑ **Primary Category**

☒ **Secondary Category**

Targeted Constituents

Sediment	☑
Nutrients	
Trash	
Metals	☑
Bacteria	
Oil and Grease	☑
Organics	

Potential Alternatives

None

Copyright 2026 by the California Stormwater Quality Association

Description and Purpose

Concrete curing is used in the construction of structures such as bridges, retaining walls, pump houses, large slabs, and structured foundations. Concrete curing includes the use of both chemical and water methods.

Concrete and its associated curing materials have basic chemical properties that can raise the pH of water to levels outside of the permitted range. Discharges of stormwater and non-stormwater exposed to concrete during curing may have a high pH and may contain chemicals, metals, and fines. The General Permit incorporates Numeric Action Levels (NAL) for pH (see Section 2 of this handbook to determine your project's risk level and if you are subject to these requirements).

Proper procedures and care should be taken when managing concrete curing materials to prevent them from coming into contact with stormwater flows, which could result in a high pH discharge.

Suitable Applications

Suitable applications include all projects where Portland Cement Concrete (PCC) and concrete curing chemicals are placed where they can be exposed to rainfall, runoff from other areas, or where runoff from the PCC will leave the site.

Limitations

- Runoff contact with concrete waste can raise pH levels in the water to environmentally harmful levels and trigger permit violations.

CASQA
CALIFORNIA STORMWATER QUALITY ASSOCIATION®

Implementation

Chemical Curing

- Avoid over spray of curing compounds.
- Minimize the drift by applying the curing compound close to the concrete surface. Apply an amount of compound that covers the surface but does not allow any runoff of the compound.
- Use proper storage and handling techniques for concrete curing compounds. Refer to WM-1, Material Delivery and Storage.
- Protect drain inlets prior to the application of curing compounds.
- Refer to WM-4, Spill Prevention and Control.

Water Curing for Bridge Decks, Retaining Walls, and other Structures

- Direct cure water away from inlets and watercourses to collection areas for evaporation or other means of removal in accordance with all applicable permits. See WM-8 Concrete Waste Management.
- Collect cure water at the top of slopes and transport to a concrete waste management area in a non-erosive manner. See EC-9 Earth Dikes and Drainage Swales, EC-10, Velocity Dissipation Devices, and EC-11, Slope Drains.
- Utilize wet blankets or a similar method that maintains moisture while minimizing the use and possible discharge of water.

Education

- Educate employees, subcontractors, and suppliers on proper concrete curing techniques to prevent contact with discharge as described herein.
- Arrange for the QSP or the appropriately trained contractor's superintendent or representative to oversee and enforce concrete curing procedures.

Inspection and Maintenance

- Inspect and verify that activity-based BMPs are in place prior to the commencement of associated activities.
- BMPs must be inspected in accordance with General Permit requirements for the associated project type and risk level. It is recommended that at a minimum, BMPs be inspected weekly, prior to forecasted rain events, daily during extended rain events, and after the conclusion of rain events.
- Inspect BMPs subject to non-stormwater discharges daily while non-stormwater discharges occur.
- Sample non-stormwater discharges and stormwater runoff that contacts uncured and partially cured concrete as required by the General Permit.

- Ensure that employees and subcontractors implement appropriate measures for storage, handling, and use of curing compounds.
- Inspect cure containers and spraying equipment for leaks.

References and Additional Resources

Construction Site Best Management Practices (BMPs) Manual, CTSW-RT-24-425.11.1, California Department of Transportation (Caltrans), March 2024.

Blue Print for a Clean Bay-Construction-Related Industries: Best Management Practices for Stormwater Pollution Prevention; Santa Clara Valley Non-Point Source Pollution Control Program, 1992.

Stormwater Management for Construction Activities, Developing Pollution Prevention Plans and Best Management Practices, EPA 832-R-92005; USEPA, April 1992.

Erosion and Sediment Control Manual, Oregon Department of Environmental Quality, February 2005.

Concrete Finishing NS-13

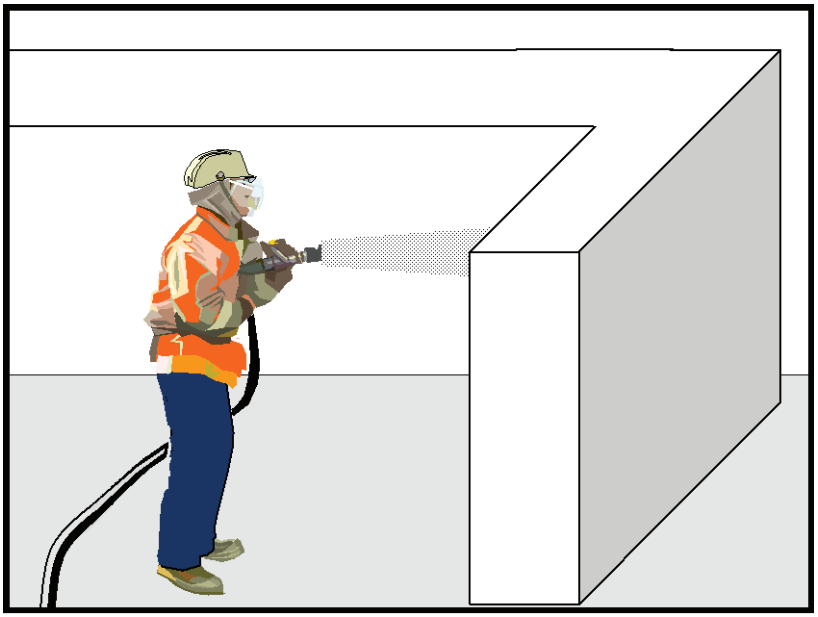

Categories

EC	Erosion Control	
SE	Sediment Control	
TC	Tracking Control	
WE	Wind Erosion Control	
NS	Non-Stormwater Management Control	☑
WM	Waste Management and Materials Pollution Control	☑

Legend:

☑ **Primary Category**

☒ **Secondary Category**

Targeted Constituents

Sediment	☑
Nutrients	
Trash	
Metals	☑
Bacteria	
Oil and Grease	
Organics	☑

Potential Alternatives

None

Copyright 2026 by the California Stormwater Quality Association

Description and Purpose

Concrete finishing methods are used for bridge deck rehabilitation, paint removal, curing compound removal, and final surface finish appearances. Methods include sand blasting, shot blasting, grinding, or high-pressure water blasting. Stormwater and non-stormwater exposed to concrete finishing by-products may have a high pH and may contain chemicals, metals, and fines. Proper procedures and implementation of appropriate BMPs can minimize the impact that concrete-finishing methods may have on stormwater and non-stormwater discharges.

The General Permit incorporates Numeric Action Levels (NAL) for pH (see Section 2 of this handbook to determine your project's risk level and if you are subject to these requirements).

Concrete and its associated curing materials have basic chemical properties that can raise pH levels outside of the permitted range. Additional care should be taken when managing these materials to prevent them from coming into contact with stormwater flows, which could lead to exceedances of the General Permit requirements.

Suitable Applications

These procedures apply to all construction locations where concrete finishing operations are performed.

Limitations

- Runoff contact with concrete waste can raise pH levels in the water to environmentally harmful levels and trigger permit violations.

Implementation

- Collect and properly dispose of water from high-pressure water blasting operations.
- Collect contaminated water from blasting operations at the top of slopes. Transport or dispose of contaminated water while using BMPs such as those for erosion control. Refer to EC-9, Earth Dikes and Drainage Swales, EC-10, Velocity Dissipation Devices, and EC-11, Slope Drains.
- Direct water from blasting operations away from inlets and watercourses to collection areas for infiltration or other means of removal (dewatering). Refer to NS-2 Dewatering Operations.
- Protect inlets during sandblasting operations. Refer to SE-10, Storm Drain Inlet Protection.
- Refer to WM-8, Concrete Waste Management for disposal of concrete debris.
- Minimize the drift of dust and blast material as much as possible by keeping the blasting nozzle close to the surface.
- When blast residue contains a potentially hazardous waste, refer to WM-6, Hazardous Waste Management.

Education

- Educate employees, subcontractors, and suppliers on proper concrete finishing techniques to prevent contact with discharge as described herein.
- Arrange for the QSP or the appropriately trained contractor's superintendent or representative to oversee and enforce concrete finishing procedures.

Inspection and Maintenance

- Inspect and verify that activity-based BMPs are in place prior to the commencement of associated activities.
- BMPs must be inspected in accordance with General Permit requirements for the associated project type and risk level. It is recommended that at a minimum, BMPs be inspected weekly, prior to forecasted rain events, daily during extended rain events, and after the conclusion of rain events.
- Inspect BMPs subject to non-stormwater discharges daily while non-stormwater discharges occur.
- Sample non-stormwater discharges and stormwater runoff that contacts concrete dust and debris as required by the General Permit.
- Sweep or vacuum up debris from sandblasting at the end of each shift.

- At the end of each work shift, remove and contain liquid and solid waste from containment structures, if any, and from the general work area.
- Inspect containment structures for damage prior to use and prior to onset of forecasted rain.

References and Additional Resources

Blueprint for a Clean Bay: Best Management Practices to Prevent Stormwater Pollution from Construction Related Activities; Santa Clara Valley Nonpoint Source Pollution Control Program, 1995.

Construction Site Best Management Practices (BMPs) Manual, CTSW-RT-24-425.11.1, California Department of Transportation (Caltrans), March 2024.

Stormwater Management for Construction Activities, Developing Pollution Prevention Plans and Best Management Practices, EPA 832-R-92005; USEPA, April 1992.

Material Delivery and Storage WM-1

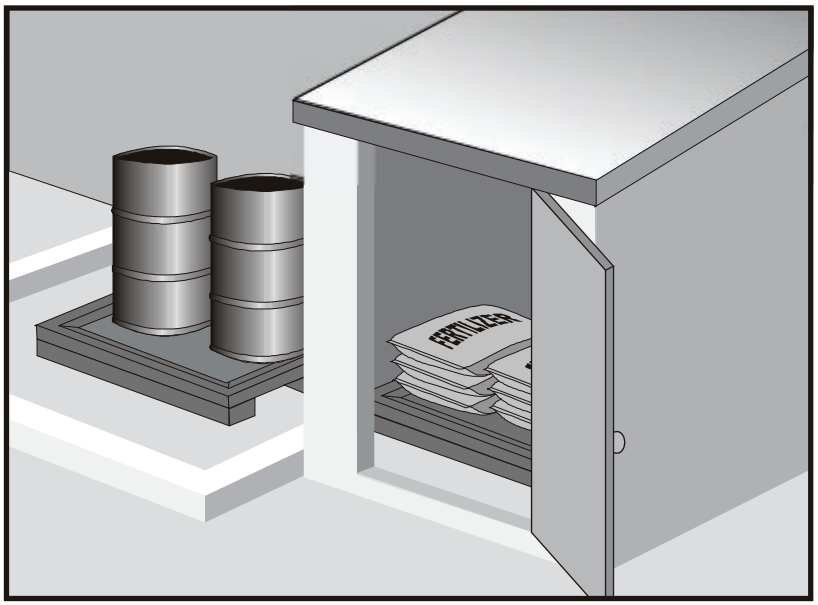

Categories

EC	Erosion Control	
SE	Sediment Control	
TC	Tracking Control	
WE	Wind Erosion Control	
NS	Non-Stormwater Management Control	
WM	Waste Management and Materials Pollution Control	☑

Legend:

☑ **Primary Category**

☒ **Secondary Category**

Targeted Constituents

Sediment	☑
Nutrients	☑
Trash	☑
Metals	☑
Bacteria	
Oil and Grease	☑
Organics	☑

Potential Alternatives

None

Description and Purpose

Prevent, reduce, or eliminate the discharge of pollutants from material delivery and storage to the stormwater system or watercourses by minimizing the storage of hazardous materials onsite, storing materials in watertight containers and/or a completely enclosed designated area, installing secondary containment, conducting regular inspections, and training employees and subcontractors.

This best management practice covers only material delivery and storage. For other information on materials, see WM-2, Material Use, or WM-4, Spill Prevention and Control. For information on wastes, see the waste management BMPs in this section.

Suitable Applications

These procedures are suitable for use at all construction sites with delivery and storage of the following materials:

- Soil stabilizers and binders
- Pesticides and herbicides
- Fertilizers
- Detergents
- Plaster
- Petroleum products such as fuel, oil, and grease

Copyright 2026 by the California Stormwater Quality Association

CASQA
CALIFORNIA STORMWATER QUALITY ASSOCIATION

- Asphalt and concrete components
- Hazardous chemicals such as acids, lime, glues, adhesives, paints, solvents, and curing compounds
- Concrete compounds
- Other materials that may be detrimental if released to the environment

Limitations

- Space limitation may preclude indoor storage.
- Storage sheds often must meet building and fire code requirements.

Implementation

The following steps should be taken to minimize risk:

- Chemicals must be stored in water tight containers with appropriate secondary containment or in a storage shed.
- When a material storage area is located on bare soil, the area should be lined and bermed.
- Use containment pallets or other practical and available solutions, such as storing materials within newly constructed buildings or garages, to meet material storage requirements.
- Stack erodible landscape material on pallets and cover when not in use.
- Contain all fertilizers and other landscape materials when not in use.
- Temporary storage areas should be located away from vehicular traffic.
- Material Safety Data Sheets (MSDS) should be available on-site for all materials stored that have the potential to effect water quality.
- Construction site areas should be designated for material delivery and storage.
- Material delivery and storage areas should be located away from waterways, if possible.
    - Avoid transport near drainage paths or waterways.
    - Surround with earth berms or other appropriate containment BMP. See EC-9, Earth Dikes and Drainage Swales.
    - Place in an area that will be paved.
- Storage of reactive, ignitable, or flammable liquids must comply with the fire codes of your area. Contact the local Fire Marshal to review site materials, quantities, and proposed storage area to determine specific requirements. See the Flammable and Combustible Liquid Code, NFPA30.
- An up to date inventory of materials delivered and stored onsite should be kept.

- Hazardous materials storage onsite should be minimized.
- Hazardous materials should be handled as infrequently as possible.
- Keep ample spill cleanup supplies appropriate for the materials being stored. Ensure that cleanup supplies are in a conspicuous, labeled area.
- Employees and subcontractors should be trained on the proper material delivery and storage practices.
- Employees trained in emergency spill cleanup procedures must be present when dangerous materials or liquid chemicals are unloaded.
- If significant residual materials remain on the ground after construction is complete, properly remove and dispose of materials and any contaminated soil. See WM-7, Contaminated Soil Management. If the area is to be paved, pave as soon as materials are removed to stabilize the soil.

Material Storage Areas and Practices

- Liquids, petroleum products, and substances listed in 40 CFR Parts 110, 117, or 302 should be stored in approved containers and drums and should not be overfilled. Containers and drums should be placed in temporary containment facilities for storage.
- A temporary containment facility should provide for a spill containment volume able to contain precipitation from a 25-year storm event, plus the greater of 10% of the aggregate volume of all containers or 100% of the capacity of the largest container within its boundary, whichever is greater.
- A temporary containment facility should be impervious to the materials stored therein for a minimum contact time of 72 hours.
- A temporary containment facility should be maintained free of accumulated rainwater and spills. In the event of spills or leaks, accumulated rainwater and spills should be collected and placed into drums. These liquids should be handled as a hazardous waste unless testing determines them to be non-hazardous. All collected liquids or non-hazardous liquids should be sent to an approved disposal site.
- Sufficient separation should be provided between stored containers to allow for spill cleanup and emergency response access.
- Incompatible materials, such as chlorine and ammonia, should not be stored in the same temporary containment facility.
- Materials should be covered prior to, and during rain events.
- Materials should be stored in their original containers and the original product labels should be maintained in place in a legible condition. Damaged or otherwise illegible labels should be replaced immediately.

- Bagged and boxed materials should be stored on pallets and should not be allowed to accumulate on the ground. To provide protection from wind and rain throughout the rainy season, bagged and boxed materials should be covered during non-working days and prior to and during rain events.
- Stockpiles should be protected in accordance with WM-3, Stockpile Management.
- Materials should be stored indoors within existing structures or completely enclosed storage sheds when available.
- Proper storage instructions should be posted at all times in an open and conspicuous location.
- An ample supply of appropriate spill clean up material should be kept near storage areas.
- Also see WM-6, Hazardous Waste Management, for storing of hazardous wastes.

Material Delivery Practices

- Keep an accurate, up-to-date inventory of material delivered and stored onsite.
- Arrange for employees trained in emergency spill cleanup procedures to be present when dangerous materials or liquid chemicals are unloaded.

Spill Cleanup

- Contain and clean up any spill immediately.
- Properly remove and dispose of any hazardous materials or contaminated soil if significant residual materials remain on the ground after construction is complete. See WM-7, Contaminated Soil Management.
- See WM-4, Spill Prevention and Control, for spills of chemicals and/or hazardous materials.
- If spills or leaks of materials occur that are not contained and could discharge to surface waters, non-visible sampling of site discharge may be required. Refer to the General Permit or to your project specific Construction Site Monitoring Plan to determine if and where sampling is required.

Inspection and Maintenance

- BMPs must be inspected in accordance with General Permit requirements for the associated project type and risk level. It is recommended that at a minimum, BMPs be inspected weekly, prior to forecasted rain events, daily during extended rain events, and after the conclusion of rain events.
- Keep storage areas clean and well organized, including a current list of all materials onsite.
- Inspect labels on containers for legibility and accuracy.
- Repair or replace perimeter controls, containment structures, covers, and liners as needed to maintain proper function.

References and Additional Resources

Construction Site Best Management Practices (BMPs) Manual, CTSW-RT-24-425.11.1, California Department of Transportation (Caltrans), March 2024.

Blueprint for a Clean Bay: Best Management Practices to Prevent Stormwater Pollution from Construction Related Activities; Santa Clara Valley Nonpoint Source Pollution Control Program, 1995.

Coastal Nonpoint Pollution Control Program: Program Development and Approval Guidance, Working Group Working Paper; USEPA, April 1992.

Stormwater Management for Construction Activities; Developing Pollution Prevention Plans and Best Management Practice, EPA 832-R-92005; USEPA, April 1992.

Material Use WM-2

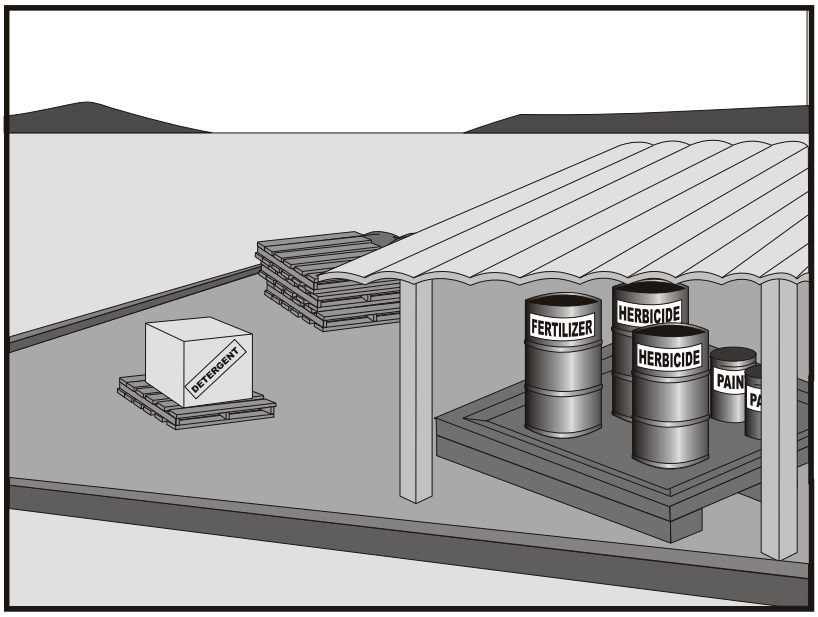

Categories

EC	Erosion Control	
SE	Sediment Control	
TC	Tracking Control	
WE	Wind Erosion Control	
NS	Non-Stormwater Management Control	
WM	Waste Management and Materials Pollution Control	☑

Legend:

☑ **Primary Category**

☒ **Secondary Category**

Targeted Constituents

Sediment	☑
Nutrients	☑
Trash	☑
Metals	☑
Bacteria	
Oil and Grease	☑
Organics	☑

Potential Alternatives

None

Copyright 2026 by the California Stormwater Quality Association

Description and Purpose

Prevent or reduce the discharge of pollutants to the storm drain system or watercourses from material use by using alternative products, minimizing hazardous material use onsite, and training employees and subcontractors.

Suitable Applications

This BMP is suitable for use at all construction projects. These procedures apply when the following materials are used or prepared onsite:

- Pesticides and herbicides
- Fertilizers
- Detergents
- Petroleum products such as fuel, oil, and grease
- Asphalt and other concrete components
- Other hazardous chemicals such as acids, lime, glues, adhesives, paints, solvents, and curing compounds
- Other materials that may be detrimental if released to the environment

Limitations

Safer alternative building and construction products may not be available or suitable in every instance.

Implementation

The following steps should be taken to minimize risk:

- Minimize use of hazardous materials onsite.
- Follow manufacturer instructions regarding uses, protective equipment, ventilation, flammability, and mixing of chemicals.
- Train personnel who use pesticides. The California Department of Pesticide Regulation and county agricultural commissioners license pesticide dealers, certify pesticide applicators, and conduct onsite inspections.
- The preferred method of termiticide application is soil injection near the existing or proposed structure foundation/slab; however, if not feasible, soil drench application of termiticides should follow EPA label guidelines and the following recommendations (most of which are applicable to most pesticide applications):
  - Do not treat soil that is water-saturated or frozen.
  - Application shall not commence within 24-hours of a predicted precipitation event with a 40% or greater probability. Weather tracking must be performed on a daily basis prior to termiticide application and during the period of termiticide application.
  - Do not allow treatment chemicals to runoff from the target area. Apply proper quantity to prevent excess runoff. Provide containment for and divert stormwater from application areas using berms or diversion ditches during application.
  - Dry season: Do not apply within 10 feet of storm drains. Do not apply within 25 feet of aquatic habitats (such as, but not limited to, lakes; reservoirs; rivers; permanent streams; marshes or ponds; estuaries; and commercial fish farm ponds).
  - Wet season: Do not apply within 50 feet of storm drains or aquatic habitats (such as, but not limited to, lakes; reservoirs; rivers; permanent streams; marshes or ponds; estuaries; and commercial fish farm ponds) unless a vegetative buffer is present (if so, refer to dry season requirements).
  - Do not make on-grade applications when sustained wind speeds are above 10 mph (at application site) at nozzle end height.
  - Cover treatment site prior to a rain event in order to prevent run-off of the pesticide into non-target areas. The treated area should be limited to a size that can be backfilled and/or covered by the end of the work shift. Backfilling or covering of the treated area shall be done by the end of the same work shift in which the application is made.
  - The applicator must either cover the soil him/herself or provide written notification of the above requirement to the contractor on site and to the person commissioning the application (if different than the contractor). If notice is provided to the contractor or the person commissioning the application, then they are responsible under the Federal Insecticide Fungicide, and Rodenticide Act (FIFRA) to ensure that: 1) if the concrete slab cannot be poured over the treated soil within 24 hours of application, the treated soil is

covered with a waterproof covering (such as polyethylene sheeting), and 2) the treated soil is covered if precipitation is predicted to occur before the concrete slab is scheduled to be poured.

- Do not over-apply fertilizers, herbicides, and pesticides. Prepare only the amount needed. Follow the recommended usage instructions. Over-application is expensive and environmentally harmful. Unless on steep slopes, till fertilizers into the soil rather than hydraulic application. Apply surface dressings in several smaller applications, as opposed to one large application, to allow time for infiltration and to avoid excess material being carried offsite by runoff. Do not apply these chemicals before predicted rainfall.
- Train employees and subcontractors in proper material use.
- Supply Material Safety Data Sheets (MSDS) for all materials.
- Dispose of latex paint and paint cans, used brushes, rags, absorbent materials, and drop cloths, when thoroughly dry and are no longer hazardous, with other construction debris.
- Do not remove the original product label; it contains important safety and disposal information. Use the entire product before disposing of the container.
- Mix paint indoors or in a containment area. Never clean paintbrushes or rinse paint containers into a street, gutter, storm drain, or watercourse. Dispose of any paint thinners, residue, and sludge(s) that cannot be recycled, as hazardous waste.
- For water-based paint, clean brushes to the extent practicable, and rinse to a drain leading to a sanitary sewer where permitted or contain for proper disposal off site. For oil-based paints, clean brushes to the extent practicable, and filter and reuse thinners and solvents.
- Use recycled and less hazardous products when practical. Recycle residual paints, solvents, non-treated lumber, and other materials.
- Use materials only where and when needed to complete the construction activity. Use safer alternative materials as much as possible. Reduce or eliminate use of hazardous materials onsite when practical.
- Document the location, time, chemicals applied, and applicator's name and qualifications.
- Keep an ample supply of spill clean up material near use areas. Train employees in spill clean up procedures.
- Avoid exposing applied materials to rainfall and runoff unless sufficient time has been allowed for them to dry.
- Discontinue use of erodible landscape material within 2 days prior to a forecasted rain event and materials should be covered and/or bermed.
- Provide containment for material use areas such as masons' areas or paint mixing/preparation areas to prevent materials/pollutants from entering stormwater.

Inspection and Maintenance

- Inspect and verify that activity-based BMPs are in place prior to the commencement of associated activities.
- BMPs must be inspected in accordance with General Permit requirements for the associated project type and risk level. It is recommended that at a minimum, BMPs be inspected weekly, prior to forecasted rain events, daily during extended rain events, and after the conclusion of rain events.
- Ensure employees and subcontractors throughout the job are using appropriate practices.

References and Additional Resources

Blueprint for a Clean Bay: Best Management Practices to Prevent Stormwater Pollution from Construction Related Activities; Santa Clara Valley Nonpoint Source Pollution Control Program, 1995.

Coastal Nonpoint Pollution Control Program: Program Development and Approval Guidance, Working Group Working Paper; USEPA, April 1992.

Comments on Risk Assessments Risk Reduction Options for Cypermethrin: Docket No. OPP–2005–0293; California Stormwater Quality Association (CASQA) letter to USEPA, 2006.Environmental Hazard and General Labeling for Pyrethroid Non-Agricultural Outdoor Products, EPA-HQ-OPP-2008-0331-0021; USEPA, 2008.

Construction Site Best Management Practices (BMPs) Manual, CTSW-RT-24-425.11.1, California Department of Transportation (Caltrans), March 2024.

Stormwater Management for Construction Activities; Developing Pollution Prevention Plans and Best Management Practice, EPA 832-R-92005; USEPA, April 1992.

Stockpile Management WM-3

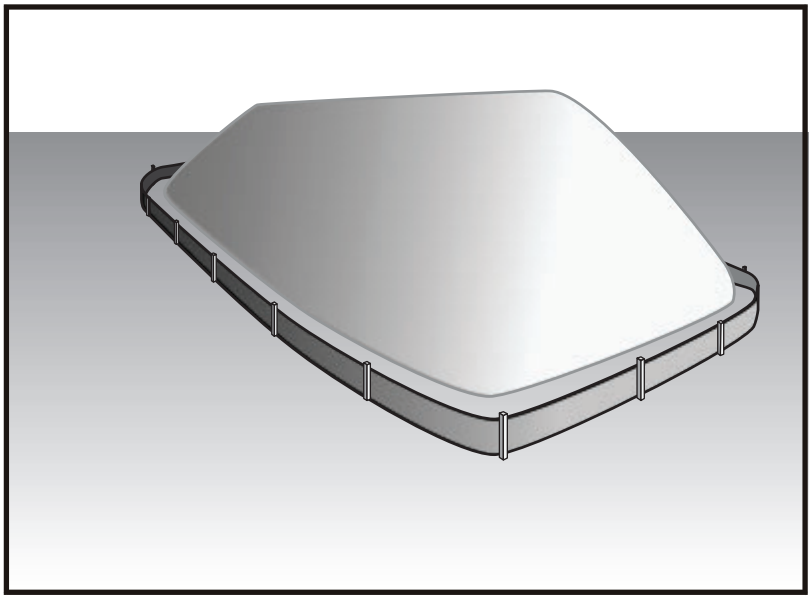

Treat Categories

EC	Erosion Control	
SE	Sediment Control	☒
TC	Tracking Control	
WE	Wind Erosion Control	☒
NS	Non-Stormwater Management Control	☒
WM	Waste Management and Materials Pollution Control	☑

Legend:

☑ **Primary Category**

☒ **Secondary Category**

Targeted Constituents

Sediment	☑
Nutrients	☑
Trash	☑
Metals	☑
Bacteria	
Oil and Grease	☑
Organics	☑

Potential Alternatives

None

Description and Purpose

Stockpile management procedures and practices are designed to reduce or eliminate air and stormwater pollution from stockpiles of soil, soil amendments, sand, paving materials such as Portland cement concrete (PCC) rubble, asphalt concrete (AC), asphalt concrete rubble, aggregate base, aggregate sub base or pre-mixed aggregate, asphalt minder (so called “cold mix” asphalt), and pressure treated wood.

Suitable Applications

Implement in all projects that stockpile soil and other loose materials.

Limitations

- Avoid the use of plastic materials and photodegradable plastics.
- Plastic sheeting as a stockpile protection is temporary and hard to manage in windy conditions. Where plastic is used, consider use of plastic tarps with nylon reinforcement which may be more durable than standard sheeting.
- Plastic sheeting can increase runoff volume due to lack of infiltration and potentially cause perimeter control failure.
- Plastic sheeting breaks down faster in sunlight.
- Limit placing stockpiles in streets or paved areas unless no other practical alternative exists.
- Not intended for the stockpiling of wet material.

Copyright 2026 by the California Stormwater Quality Association

CASQA
CALIFORNIA STORMWATER QUALITY ASSOCIATION

Implementation

Protection of stockpiles is a year-round requirement. To properly manage stockpiles:

- Maintain a recommended minimum 50 ft separation from concentrated flows of stormwater, drainage courses, and inlets.
- After 14 days of inactivity, a stockpile is non-active and requires further protection described in the Protection of Non-Active Stockpiles section below. All stockpiles are required to be protected as non-active stockpiles immediately if they are not scheduled to be used within 14 days.
- Protect all stockpiles from stormwater run-on using temporary perimeter sediment barriers or berms such as compost berms (SE-13), temporary silt dikes (SE-12), silt fences (SE-1), sandbags (SE-8), gravel bags (SE-6), or biofilter bags (SE-14). Refer to the individual fact sheet for each of these controls for installation information.
- Implement wind erosion control practices as appropriate on all stockpiled material. For specific information, see WE-1, Wind Erosion Control.
- Manage stockpiles of contaminated soil in accordance with WM-7, Contaminated Soil Management.
- Place bagged materials on pallets and under cover.
- Secure and anchor down stockpile covers / tarps to protect from wind and rain.
- Some plastic covers /tarps withstand weather and sunlight better than others. Select cover materials or methods based on anticipated duration of use.

Protection of Non-Active Stockpiles

A stockpile is considered non-active if it either is not used for 14 days or if it is scheduled not to be used for 14 days or more. Stockpiles need to be protected immediately if they are not scheduled to be used within 14 days. Protect non-active stockpiles of the identified materials as follows:

Soil stockpiles

- Cover or protect soil stockpiles with soil stabilization measures and a temporary perimeter sediment barrier or berm at all times.
- Consider temporary vegetation for topsoil piles that will be stockpiled for extended periods.

Stockpiles of Portland cement concrete rubble, asphalt concrete, asphalt concrete rubble, aggregate base, or aggregate sub base

- Cover and protect stockpiles with a temporary perimeter sediment barrier or berm at all times.

Stockpiles of "cold mix"

- Place cold mix stockpiles on and covered with plastic sheeting / tarp or comparable material at all times and surrounded by a berm.

Stockpiles of fly ash, stucco, hydrated lime

- Place stockpiles of materials that may raise the pH of runoff (i.e., basic materials) on and covered with plastic sheeting /tarps or comparable material at all times and surrounded by a berm.

Stockpiles/Storage of treated wood

- Cover treated wood with plastic sheeting or comparable material at all times and surrounded by a berm.

Protection of Active Stockpiles

A stockpile is active when it is being used or is scheduled to be used within 14 days of the previous use. Protect active stockpiles of the identified materials as follows:

- Cover and protect all stockpiles with a temporary linear sediment barrier or berm prior to the onset of precipitation.
- Place stockpiles of "cold mix" and treated wood, and basic materials on plastic sheeting and covered with plastic sheeting or comparable material and surrounded by a berm prior to the onset of precipitation.
- Protect the downstream perimeter of an active stockpile with a linear sediment barrier or berm and divert run-on around or away from the stockpile on the upstream perimeter.

Protection of Stockpiles on Paved Surfaces

While generally avoided, the following site conditions may necessitate placing a stockpile on paved surfaces: 1. utility repairs, 2. when other staging locations and options are limited, and 3. for limited application and short duration staging.

- Do not place stockpiles in streets or paved areas unless no other practical alternative exists.
- Place stockpiles on plastic sheeting and covered with plastic tarp or comparable material and surrounded by a berm prior to the onset of precipitation.
- Use Gravel Bag Berms (SE-6), Compost Socks and Berms (SE-13), or other Manufactured Linear Sediment Controls (SE-12) designed for installation on pavement. The use of straw wattles weighed down by sandbags are not acceptable for use as a berm or as an tarp anchor.
- Divert run-on around or away from the stockpile on the upstream perimeter.
- When a stockpile is placed on a sloped paved surface (such as a crowned road), place the stockpile 2-3ft away from the street curb to allow stormwater to freely flow to a catch basin. If there is no alternative but to place the stockpile up against a curb, implement measures to divert stormwater safely around the stockpile to avoid ponding /flooding.
- If a perforated pipe is used to divert water, inspect it for clogging and debris and remove the obstructions promptly.

Inspection and Maintenance

- Inspect stockpiles in accordance with General Permit requirements for the associated project type and risk level. It is recommended that at a minimum, BMPs be inspected weekly, prior to forecasted rain events, daily during extended rain events, and after the conclusion of rain events.
- It may be necessary to inspect stockpiles covered with plastic sheeting more frequently during certain conditions (for example, high winds or extreme heat).
- Repair and/or replace perimeter controls and covers as needed to keep them functioning properly.
- Remove sediment when it reaches one-third of the barrier or berm height.

References and Additional Resources

Construction Site Best Management Practices (BMPs) Manual, CTSW-RT-24-425.11.1, California Department of Transportation (Caltrans), March 2024.

Stockpile Management (SP) MM-2, Urban Storm Drainage Criteria Manual, Volume 3, Mile High Flood District, Urban Drainage and Flood Control District, November 2010.

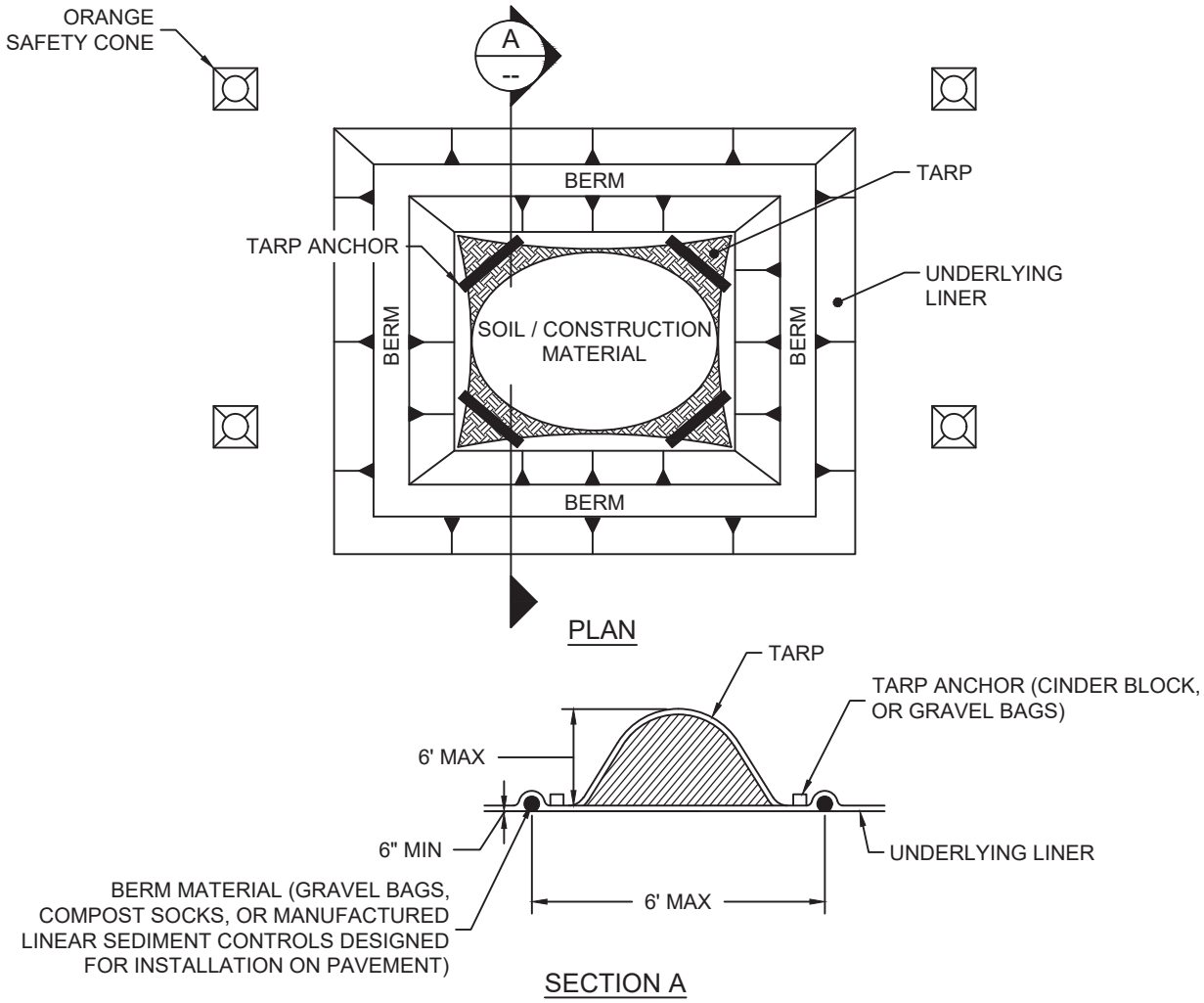

MATERIALS STAGING ON FLAT PAVED SURFACE

NOTES:

1. See plan view of the stockpile management area.
2. Install stockpile management location(s) prior to excavation, earthwork, or delivery of materials.
3. Place materials on the liner. cleanup any incidental materials deposited on paved sections or along the curb line promptly.
4. Choose a significant thickness of the liner and tarp cover to prevent damage or loss of integrity.
5. Use of straw wattles weighed down by sandbags are not acceptable for use as a berm or as a tarp anchor. instead use gravel berms, compost socks, or manufactured linear sediment controls designed for installation on pavement.
6. Not intended for the stockpiling of wet materials.
7. Intended for use for: 1. utility repairs, 2. when other staging locations and options are limited, and 3. limited application and short duration staging. stockpiles should not be placed in streets or paved areas unless no other practical alternative exists.

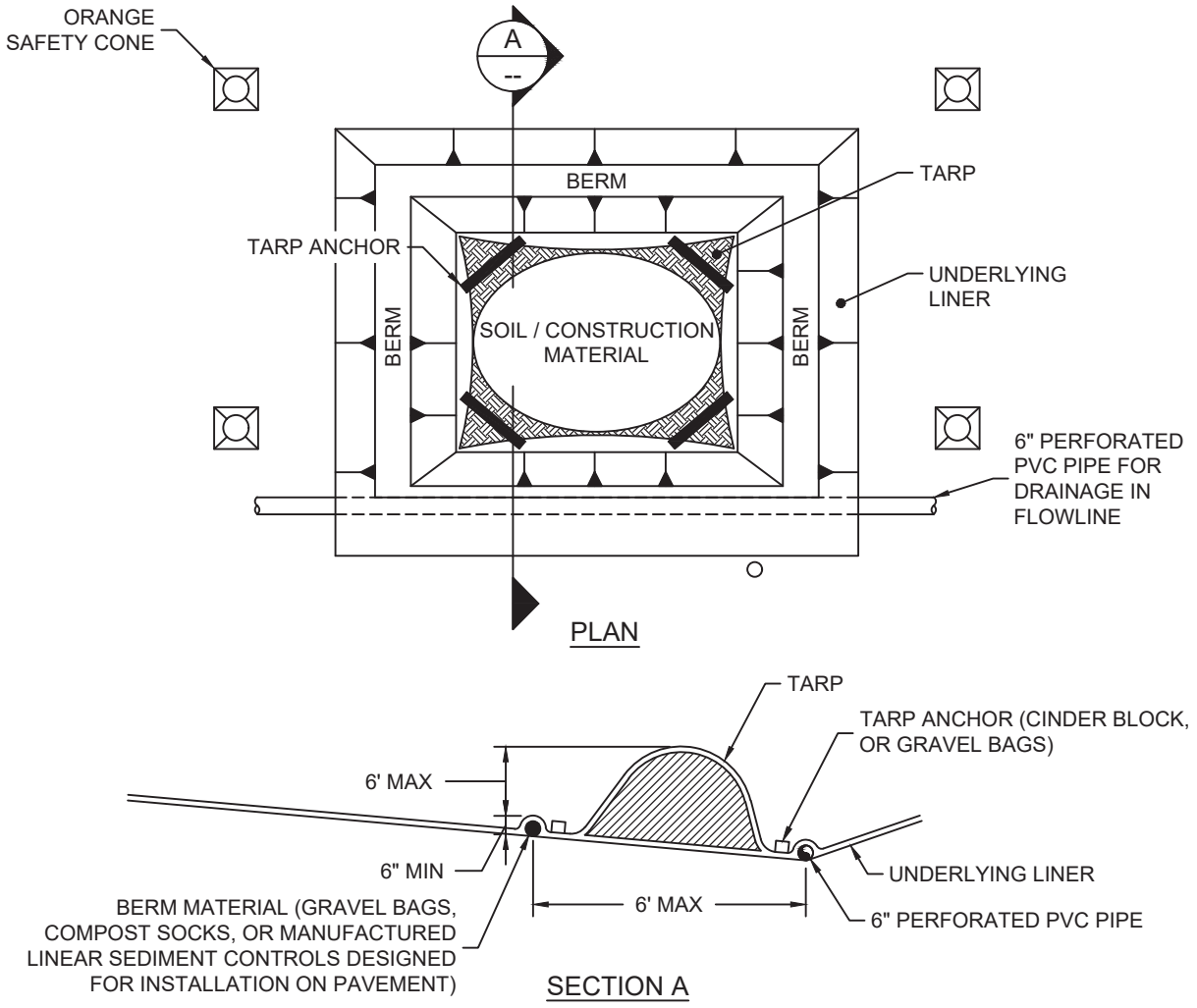

MATERIALS STAGING ON SLOPED PAVED SURFACE

NOTES:

1. See plan view of the stockpile management area.
2. Install stockpile management location(s) prior to excavation, earthwork, or delivery of materials.
3. Place materials on the liner. cleanup any incidental materials deposited on paved sections or along the curb line promptly.
4. Choose a significant thickness of the liner and tarp cover to prevent damage or loss of integrity.
5. If a perforated pvc pipe is used to divert water, inspect it for clogging and debris. remove obstructions promptly.
6. Use of straw wattles weighed down by sandbags are not acceptable for use as a berm or as a tarp anchor. instead use gravel berms, compost socks, or manufactured linear sediment controls designed for installation on pavement.
7. Not intended for the stockpiling of wet materials.
8. Intended for use for: 1. utility repairs, 2. when other staging locations and options are limited, and 3. limited application and short duration staging. stockpiles should not be placed in streets or paved areas unless no other practical alternative exists.

Spill Prevention and Control WM-4

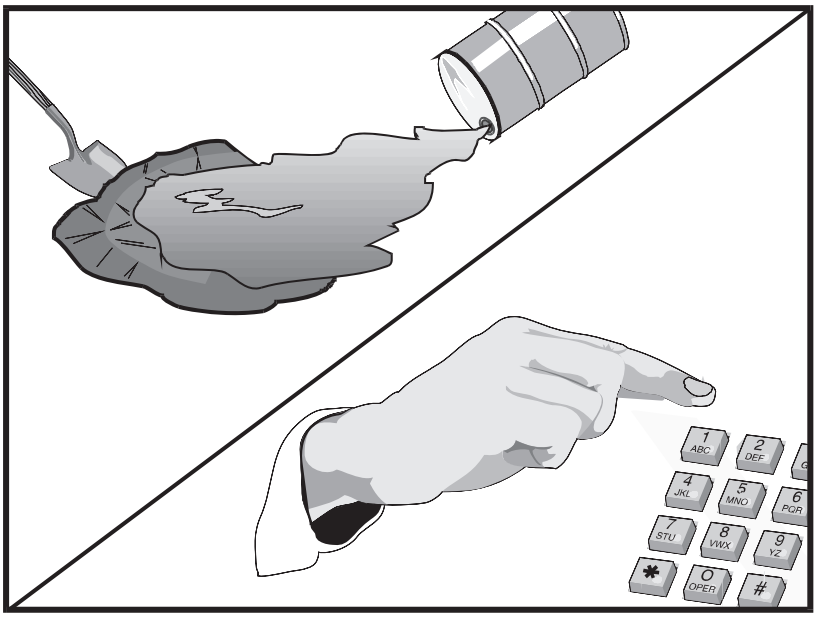

Categories

EC	Erosion Control	
SE	Sediment Control	
TC	Tracking Control	
WE	Wind Erosion Control	
NS	Non-Stormwater Management Control	
WM	Waste Management and Materials Pollution Control	☑

Legend:

☑ **Primary Objective**

☒ **Secondary Objective**

Targeted Constituents

Sediment	☑
Nutrients	☑
Trash	☑
Metals	☑
Bacteria	
Oil and Grease	☑
Organics	☑

Potential Alternatives

None

Copyright 2026 by the California Stormwater Quality Association

Description and Purpose

Prevent or reduce the discharge of pollutants to drainage systems or watercourses from leaks and spills by reducing the chance for spills, stopping the source of spills, containing and cleaning up spills, properly disposing of spill materials, and training employees.

This best management practice covers only spill prevention and control. However, WM-1, Materials Delivery and Storage, and WM-2, Material Use, also contain useful information, particularly on spill prevention. For information on wastes, see the waste management BMPs in this section.

Suitable Applications

This BMP is suitable for all construction projects. Spill control procedures are implemented anytime chemicals or hazardous substances are stored on the construction site, including the following materials:

- Soil stabilizers/binders
- Dust palliatives
- Herbicides
- Growth inhibitors
- Fertilizers
- Deicing/anti-icing chemicals

- Fuels
- Lubricants
- Other petroleum distillates

Limitations

- In some cases, it may be necessary to use a private spill cleanup company.
- This BMP applies to spills caused by the contractor and subcontractors.
- Procedures and practices presented in this BMP are general. Contractor should identify appropriate practices for the specific materials used or stored onsite

Implementation

The following steps will help reduce the stormwater impacts of leaks and spills:

Education

- Be aware that different materials pollute in different amounts. Make sure that each employee knows what a "significant spill" is for each material they use, and what is the appropriate response for "significant" and "insignificant" spills.
- Educate employees and subcontractors on potential dangers to humans and the environment from spills and leaks.
- Hold regular meetings to discuss and reinforce appropriate disposal procedures (incorporate into regular safety meetings).
- Establish a continuing education program to indoctrinate new employees.
- Have contractor's superintendent or representative oversee and enforce proper spill prevention and control measures.

General Measures

- To the extent that the work can be accomplished safely, spills of oil, petroleum products, substances listed under 40 CFR parts 110,117, and 302, and sanitary and septic wastes should be contained and cleaned up immediately.
- Store hazardous materials and wastes in covered containers and protect from vandalism.
- Place a stockpile of spill cleanup materials where it will be readily accessible.
- Train employees in spill prevention and cleanup.
- Designate responsible individuals to oversee and enforce control measures.
- Spills should be covered and protected from stormwater runon during rainfall to the extent that it doesn't compromise clean up activities.
- Do not bury or wash spills with water.

- Store and dispose of used clean up materials, contaminated materials, and recovered spill material that is no longer suitable for the intended purpose in conformance with the provisions in applicable BMPs.
- Do not allow water used for cleaning and decontamination to enter storm drains or watercourses. Collect and dispose of contaminated water in accordance with WM-10, Liquid Waste Management.
- Contain water overflow or minor water spillage and do not allow it to discharge into drainage facilities or watercourses.
- Place proper storage, cleanup, and spill reporting instructions for hazardous materials stored or used on the project site in an open, conspicuous, and accessible location.
- Keep waste storage areas clean, well organized, and equipped with ample cleanup supplies as appropriate for the materials being stored. Perimeter controls, containment structures, covers, and liners should be repaired or replaced as needed to maintain proper function.

Cleanup

- Clean up leaks and spills immediately.
- Use a rag for small spills on paved surfaces, a damp mop for general cleanup, and absorbent material for larger spills. If the spilled material is hazardous, then the used cleanup materials are also hazardous and must be sent to either a certified laundry (rags) or disposed of as hazardous waste.
- Never hose down or bury dry material spills. Clean up as much of the material as possible and dispose of properly. See the waste management BMPs in this section for specific information.

Minor Spills

- Minor spills typically involve small quantities of oil, gasoline, paint, etc. which can be controlled by the first responder at the discovery of the spill.
- Use absorbent materials on small spills rather than hosing down or burying the spill.
- Absorbent materials should be promptly removed and disposed of properly.
- Follow the practice below for a minor spill:
  - Contain the spread of the spill.
  - Recover spilled materials.
  - Clean the contaminated area and properly dispose of contaminated materials.

Semi-Significant Spills

- Semi-significant spills still can be controlled by the first responder along with the aid of other personnel such as laborers and the foreman, etc. This response may require the cessation of all other activities.

- Spills should be cleaned up immediately:
  - Contain spread of the spill.
  - Notify the project foreman immediately.
  - If the spill occurs on paved or impermeable surfaces, clean up using "dry" methods (absorbent materials, cat litter and/or rags). Contain the spill by encircling with absorbent materials and do not let the spill spread widely.
  - If the spill occurs in dirt areas, immediately contain the spill by constructing an earthen dike. Dig up and properly dispose of contaminated soil.
  - If the spill occurs during rain, cover spill with tarps or other material to prevent contaminating runoff.

Significant/Hazardous Spills

- For significant or hazardous spills that cannot be controlled by personnel in the immediate vicinity, the following steps should be taken:
  - Notify the local emergency response by dialing 911. In addition to 911, the contractor will notify the proper county officials. It is the contractor's responsibility to have all emergency phone numbers at the construction site.
  - Notify the Governor's Office of Emergency Services Warning Center, (916) 845-8911.
  - For spills of federal reportable quantities, in conformance with the requirements in 40 CFR parts 110,119, and 302, the contractor should notify the National Response Center at (800) 424-8802.
  - Notification should first be made by telephone and followed up with a written report.
  - The services of a spill's contractor or a Haz-Mat team should be obtained immediately. Construction personnel should not attempt to clean up until the appropriate and qualified staffs have arrived at the job site.
  - Other agencies which may need to be consulted include, but are not limited to, the Fire Department, the Public Works Department, the Coast Guard, the Highway Patrol, the City/County Police Department, Department of Toxic Substances, California Division of Oil and Gas, Cal/OSHA, etc.

Reporting

- Report significant spills to local agencies, such as the Fire Department; they can assist in cleanup.
- Federal regulations require that any significant oil spill into a water body or onto an adjoining shoreline be reported to the National Response Center (NRC) at 800-424-8802 (24 hours).

Use the following measures related to specific activities:

Vehicle and Equipment Maintenance

- If maintenance must occur onsite, use a designated area and a secondary containment, located away from drainage courses, to prevent the runon of stormwater and the runoff of spills.
- Regularly inspect onsite vehicles and equipment for leaks and repair immediately
- Check incoming vehicles and equipment (including delivery trucks, and employee and subcontractor vehicles) for leaking oil and fluids. Do not allow leaking vehicles or equipment onsite.
- Always use secondary containment, such as a drain pan or drop cloth, to catch spills or leaks when removing or changing fluids.
- Place drip pans or absorbent materials under paving equipment when not in use.
- Use absorbent materials on small spills rather than hosing down or burying the spill. Remove the absorbent materials promptly and dispose of properly.
- Promptly transfer used fluids to the proper waste or recycling drums. Don't leave full drip pans or other open containers lying around
- Oil filters disposed of in trashcans or dumpsters can leak oil and pollute stormwater. Place the oil filter in a funnel over a waste oil-recycling drum to drain excess oil before disposal. Oil filters can also be recycled. Ask the oil supplier or recycler about recycling oil filters.
- Store cracked batteries in a non-leaking secondary container. Do this with all cracked batteries even if you think all the acid has drained out. If you drop a battery, treat it as if it is cracked. Put it into the containment area until you are sure it is not leaking.

Vehicle and Equipment Fueling

- If fueling must occur onsite, use designate areas, located away from drainage courses, to prevent the runon of stormwater and the runoff of spills.
- Discourage "topping off" of fuel tanks.
- Always use secondary containment, such as a drain pan, when fueling to catch spills/ leaks.

Inspection and Maintenance

- Inspect and verify that activity–based BMPs are in place prior to the commencement of associated activities. While activities associated with the BMP are under way, inspect BMPs in accordance with General Permit requirements for the associated project type and risk level. It is recommended that at a minimum, BMPs be inspected weekly, prior to forecasted rain events, daily during extended rain events, and after the conclusion of rain events.
- Inspect BMPs subject to non-stormwater discharge daily while non-stormwater discharges occur.

- Keep ample supplies of spill control and cleanup materials onsite, near storage, unloading, and maintenance areas.
- Update your spill prevention and control plan and stock cleanup materials as changes occur in the types of chemicals onsite.

References and Additional Resources

Construction Site Best Management Practices (BMPs) Manual, CTSW-RT-24-425.11.1, California Department of Transportation (Caltrans), March 2024.

Blueprint for a Clean Bay: Best Management Practices to Prevent Stormwater Pollution from Construction Related Activities; Santa Clara Valley Nonpoint Source Pollution Control Program, 1995.

Stormwater Management for Construction Activities; Developing Pollution Prevention Plans and Best Management Practice, EPA 832-R-92005; USEPA, April 1992.

Solid Waste Management WM-5

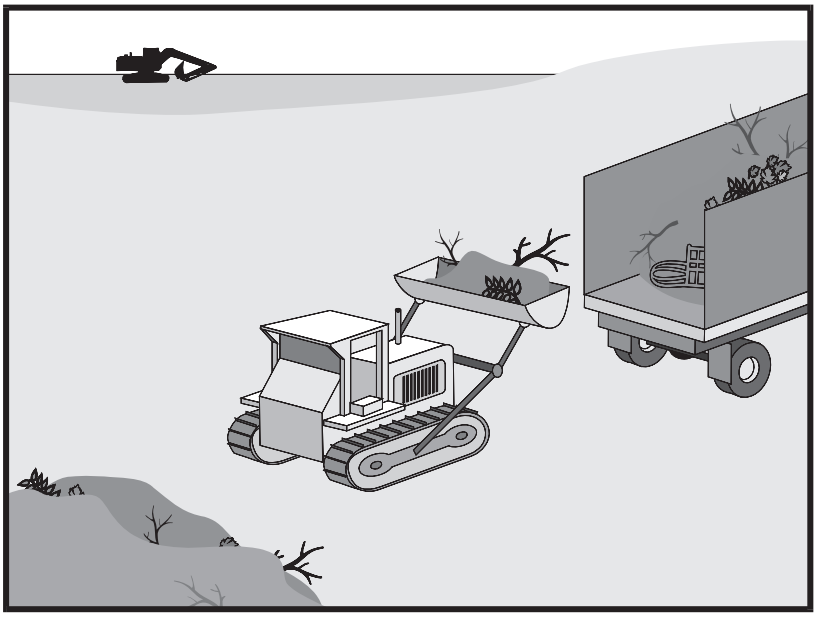

Categories

EC	Erosion Control	
SE	Sediment Control	
TC	Tracking Control	
WE	Wind Erosion Control	
NS	Non-Stormwater Management Control	
WM	Waste Management and Materials Pollution Control	☑

Legend:

☑ **Primary Objective**

☒ **Secondary Objective**

Targeted Constituents

Sediment	☑
Nutrients	☑
Trash	☑
Metals	☑
Bacteria	
Oil and Grease	☑
Organics	☑

Potential Alternatives

None

Copyright 2026 by the California Stormwater Quality Association

Description and Purpose

Solid waste management procedures and practices are designed to prevent or reduce the discharge of pollutants to stormwater from solid or construction waste by providing designated waste collection areas and containers, arranging for regular disposal, and training employees and subcontractors.

Suitable Applications

This BMP is suitable for construction sites where the following wastes are generated or stored:

- Solid waste generated from trees and shrubs removed during land clearing, demolition of existing structures (rubble), and building construction
- Packaging materials including wood, paper, and plastic
- Scrap or surplus building materials including scrap metals, rubber, plastic, glass pieces, and masonry products
- Domestic wastes including food containers such as beverage cans, coffee cups, paper bags, plastic wrappers, and cigarettes
- Construction wastes including brick, mortar, timber, steel and metal scraps, pipe and electrical cuttings, non-hazardous equipment parts, styrofoam and other materials used to transport and package construction materials

CASQA
CALIFORNIA STORMWATER QUALITY ASSOCIATION®

- Highway planting wastes, including vegetative material, plant containers, and packaging materials

Limitations

Temporary stockpiling of certain construction wastes may not necessitate stringent drainage related controls during the non-rainy season or in desert areas with low rainfall.

Implementation

The following steps will help keep a clean site and reduce stormwater pollution:

- Select designated waste collection areas onsite.
- Inform trash-hauling contractors that you will accept only watertight dumpsters for onsite use. Inspect dumpsters for leaks and repair any dumpster that is not watertight.
- Locate containers in a covered area or in a secondary containment.
- Provide an adequate number of containers with lids or covers that can be placed over the container to keep rain out or to prevent loss of wastes when it is windy.
- Cover waste containers at the end of each work day and when it is raining.
- Plan for additional containers and more frequent pickup during the demolition phase of construction.
- Collect site trash daily, especially during rainy and windy conditions.
- Remove this solid waste promptly since erosion and sediment control devices tend to collect litter.
- Make sure that toxic liquid wastes (used oils, solvents, and paints) and chemicals (acids, pesticides, additives, curing compounds) are not disposed of in dumpsters designated for construction debris.
- Do not hose out dumpsters on the construction site. Leave dumpster cleaning to the trash hauling contractor.
- Arrange for regular waste collection before containers overflow.
- Clean up immediately if a container does spill.
- Make sure that construction waste is collected, removed, and disposed of only at authorized disposal areas.

Education

- Have the contractor's superintendent or representative oversee and enforce proper solid waste management procedures and practices.
- Instruct employees and subcontractors on identification of solid waste and hazardous waste.
- Educate employees and subcontractors on solid waste storage and disposal procedures.

- Hold regular meetings to discuss and reinforce disposal procedures (incorporate into regular safety meetings).
- Require that employees and subcontractors follow solid waste handling and storage procedures.
- Prohibit littering by employees, subcontractors, and visitors.
- Minimize production of solid waste materials wherever possible.

Collection, Storage, and Disposal

- Littering on the project site should be prohibited.
- To prevent clogging of the storm drainage system, litter and debris removal from drainage grates, trash racks, and ditch lines should be a priority.
- Trash receptacles should be provided in the contractor's yard, field trailer areas, and at locations where workers congregate for lunch and break periods.
- Litter from work areas within the construction limits of the project site should be collected and placed in watertight dumpsters at least weekly, regardless of whether the litter was generated by the contractor, the public, or others. Collected litter and debris should not be placed in or next to drain inlets, stormwater drainage systems, or watercourses.
- Dumpsters of sufficient size and number should be provided to contain the solid waste generated by the project.
- Full dumpsters should be removed from the project site and the contents should be disposed of by the trash hauling contractor.
- Construction debris and waste should be removed from the site biweekly or more frequently as needed.
- Construction material visible to the public should be stored or stacked in an orderly manner.
- Stormwater runon should be prevented from contacting stored solid waste through the use of berms, dikes, or other temporary diversion structures or through the use of measures to elevate waste from site surfaces.
- Solid waste storage areas should be located at least 50 ft from drainage facilities and watercourses and should not be located in areas prone to flooding or ponding.
- Except during fair weather, construction and highway planting waste not stored in watertight dumpsters should be securely covered from wind and rain by covering the waste with tarps or plastic.
- Segregate potentially hazardous waste from non-hazardous construction site waste.
- Make sure that toxic liquid wastes (used oils, solvents, and paints) and chemicals (acids, pesticides, additives, curing compounds) are not disposed of in dumpsters designated for construction debris.

- For disposal of hazardous waste, see WM-6, Hazardous Waste Management. Have hazardous waste hauled to an appropriate disposal and/or recycling facility.
- Salvage or recycle useful vegetation debris, packaging and surplus building materials when practical. For example, trees and shrubs from land clearing can be used as a brush barrier, or converted into wood chips, then used as mulch on graded areas. Wood pallets, cardboard boxes, and construction scraps can also be recycled.

Inspection and Maintenance

- Inspect and verify that activity–based BMPs are in place prior to the commencement of associated activities. While activities associated with the BMP are under way, inspect BMPs in accordance with General Permit requirements for the associated project type and risk level. It is recommended that at a minimum, BMPs be inspected weekly, prior to forecasted rain events, daily during extended rain events, and after the conclusion of rain events.
- Inspect BMPs subject to non-stormwater discharge daily while non-stormwater discharges occur
- Inspect construction waste area regularly.
- Arrange for regular waste collection.

References and Additional Resources

Construction Site Best Management Practices (BMPs) Manual, CTSW-RT-24-425.11.1, California Department of Transportation (Caltrans), March 2024.

Processes, Procedures and Methods to Control Pollution Resulting from All Construction Activity, 430/9-73-007, USEPA, 1973.

Stormwater Management for Construction Activities; Developing Pollution Prevention Plans and Best Management Practice, EPA 832-R-92005; USEPA, April 1992.

Hazardous Waste Management WM-6

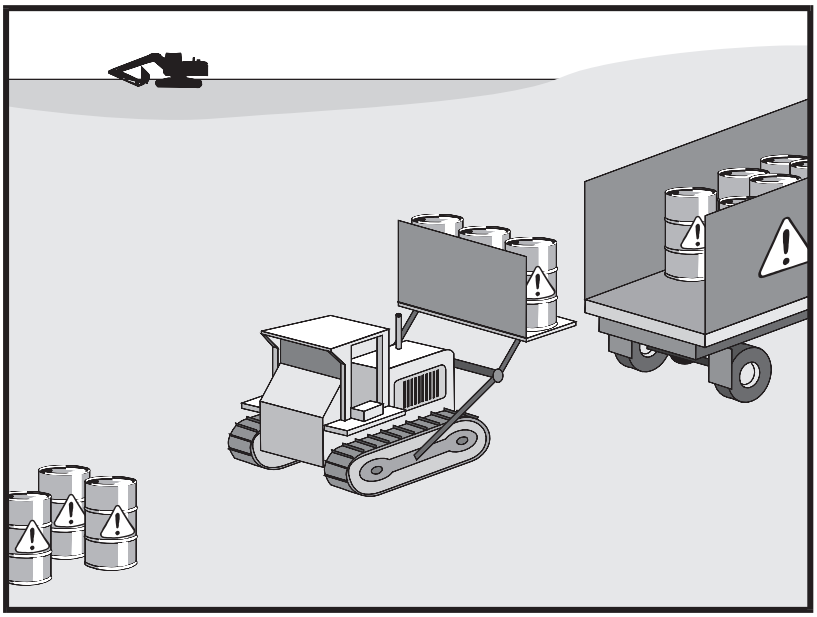

Categories

EC	Erosion Control	
SE	Sediment Control	
TC	Tracking Control	
WE	Wind Erosion Control	
NS	Non-Stormwater Management Control	
WM	Waste Management and Materials Pollution Control	☑

Legend:

☑ **Primary Objective**

☒ **Secondary Objective**

Targeted Constituents

Sediment	
Nutrients	☑
Trash	☑
Metals	☑
Bacteria	☑
Oil and Grease	☑
Organics	☑

Potential Alternatives

None

Copyright 2026 by the California Stormwater Quality Association

Description and Purpose

Prevent or reduce the discharge of pollutants to stormwater from hazardous waste through proper material use, waste disposal, and training of employees and subcontractors.

Suitable Applications

This best management practice (BMP) applies to all construction projects. Hazardous waste management practices are implemented on construction projects that generate waste from the use of:

- Petroleum Products
- Asphalt Products
- Concrete Curing Compounds
- Pesticides
- Palliatives
- Acids
- Septic Wastes
- Paints
- Stains
- Solvents
- Wood Preservatives
- Roofing Tar
- Any materials deemed a hazardous waste in California, Title 22 Division 4.5, or listed in 40 CFR Parts 110, 117, 261, or 302

In addition, sites with existing structures may contain wastes, which must be disposed of in accordance with federal, state, and local regulations. These wastes include:

- Sandblasting grit mixed with lead-, cadmium-, or chromium-based paints
- Asbestos
- PCBs (particularly in older transformers)

Limitations

- Hazardous waste that cannot be reused or recycled must be disposed of by a licensed hazardous waste hauler.
- Nothing in this BMP relieves the contractor from responsibility for compliance with federal, state, and local laws regarding storage, handling, transportation, and disposal of hazardous wastes.
- This BMP does not cover aerially deposited lead (ADL) soils. For ADL soils refer to WM-7, Contaminated Soil Management.

Implementation

The following steps will help reduce stormwater pollution from hazardous wastes:

Material Use

- Wastes should be stored in sealed containers constructed of a suitable material and should be labeled as required by Title 22 CCR, Division 4.5 and 49 CFR Parts 172, 173, 178, and 179.
- All hazardous waste should be stored, transported, and disposed as required in Title 22 CCR, Division 4.5 and 49 CFR 261-263.
- Waste containers should be stored in temporary containment facilities that should comply with the following requirements:
  - Temporary containment facility should provide for a spill containment volume equal to 1.5 times the volume of all containers able to contain precipitation from a 25-year storm event, plus the greater of 10% of the aggregate volume of all containers or 100% of the capacity of the largest tank within its boundary, whichever is greater.
  - Temporary containment facility should be impervious to the materials stored there for a minimum contact time of 72 hours.
  - Temporary containment facilities should be maintained free of accumulated rainwater and spills. In the event of spills or leaks, accumulated rainwater and spills should be placed into drums after each rainfall. These liquids should be handled as a hazardous waste unless testing determines them to be non-hazardous. Non-hazardous liquids should be sent to an approved disposal site.
  - Sufficient separation should be provided between stored containers to allow for spill cleanup and emergency response access.

  - Incompatible materials, such as chlorine and ammonia, should not be stored in the same temporary containment facility.

  - Throughout the rainy season, temporary containment facilities should be covered during non-working days, and prior to rain events. Covered facilities may include use of plastic tarps for small facilities or constructed roofs with overhangs.

- Drums should not be overfilled, and wastes should not be mixed.

- Unless watertight, containers of dry waste should be stored on pallets.

- Do not over-apply herbicides and pesticides. Prepare only the amount needed. Follow the recommended usage instructions. Over application is expensive and environmentally harmful. Apply surface dressings in several smaller applications, as opposed to one large application. Allow time for infiltration and avoid excess material being carried offsite by runoff. Do not apply these chemicals just before it rains. People applying pesticides must be certified in accordance with federal and state regulations.

- Paint brushes and equipment for water and oil-based paints should be cleaned within a contained area and should not be allowed to contaminate site soils, watercourses, or drainage systems. Waste paints, thinners, solvents, residues, and sludges that cannot be recycled or reused should be disposed of as hazardous waste. When thoroughly dry, latex paint and paint cans, used brushes, rags, absorbent materials, and drop cloths should be disposed of as solid waste.

- Do not clean out brushes or rinse paint containers into the dirt, street, gutter, storm drain, or stream. “Paint out” brushes as much as possible. Rinse water-based paints to the sanitary sewer. Filter and reuse thinners and solvents. Dispose of excess oil-based paints and sludge as hazardous waste.

- The following actions should be taken with respect to temporary contaminant:

  - Ensure that adequate hazardous waste storage volume is available.

  - Ensure that hazardous waste collection containers are conveniently located.

  - Designate hazardous waste storage areas onsite away from storm drains or watercourses and away from moving vehicles and equipment to prevent accidental spills.

  - Minimize production or generation of hazardous materials and hazardous waste on the job site.

  - Use containment berms in fueling and maintenance areas and where the potential for spills is high.

  - Segregate potentially hazardous waste from non-hazardous construction site debris.

  - Keep liquid or semi-liquid hazardous waste in appropriate containers (closed drums or similar) and under cover.

- Clearly label all hazardous waste containers with the waste being stored and the date of accumulation.
- Place hazardous waste containers in secondary containment.
- Do not allow potentially hazardous waste materials to accumulate on the ground.
- Do not mix wastes.
- Use all of the product before disposing of the container.
- Do not remove the original product label; it contains important safety and disposal information.

Waste Recycling Disposal

- Select designated hazardous waste collection areas onsite.
- Hazardous materials and wastes should be stored in covered containers and protected from vandalism.
- Place hazardous waste containers in secondary containment.
- Do not mix wastes, this can cause chemical reactions, making recycling impossible and complicating disposal.
- Recycle any useful materials such as used oil or water-based paint.
- Make sure that toxic liquid wastes (used oils, solvents, and paints) and chemicals (acids, pesticides, additives, curing compounds) are not disposed of in dumpsters designated for construction debris.
- Arrange for regular waste collection before containers overflow.
- Make sure that hazardous waste (e.g., excess oil-based paint and sludge) is collected, removed, and disposed of only at authorized disposal areas.

Disposal Procedures

- Waste should be disposed of by a licensed hazardous waste transporter at an authorized and licensed disposal facility or recycling facility utilizing properly completed Uniform Hazardous Waste Manifest forms.
- A Department of Health Services certified laboratory should sample waste to determine the appropriate disposal facility.
- Properly dispose of rainwater in secondary containment that may have mixed with hazardous waste.
- Attention is directed to "Hazardous Material", "Contaminated Material", and "Aerially Deposited Lead" of the contract documents regarding the handling and disposal of hazardous materials.

Education

- Educate employees and subcontractors on hazardous waste storage and disposal procedures.
- Educate employees and subcontractors on potential dangers to humans and the environment from hazardous wastes.
- Instruct employees and subcontractors on safety procedures for common construction site hazardous wastes.
- Instruct employees and subcontractors in identification of hazardous and solid waste.
- Hold regular meetings to discuss and reinforce hazardous waste management procedures (incorporate into regular safety meetings).
- The contractor's superintendent or representative should oversee and enforce proper hazardous waste management procedures and practices.
- Make sure that hazardous waste is collected, removed, and disposed of only at authorized disposal areas.
- Warning signs should be placed in areas recently treated with chemicals.
- Place a stockpile of spill cleanup materials where it will be readily accessible.
- If a container does spill, clean up immediately.

Inspection and Maintenance

- Inspect and verify that activity–based BMPs are in place prior to the commencement of associated activities. While activities associated with the BMP are under way, inspect BMPs in accordance with General Permit requirements for the associated project type and risk level. It is recommended that at a minimum, BMPs be inspected weekly, prior to forecasted rain events, daily during extended rain events, and after the conclusion of rain events.
- Inspect BMPs subject to non-stormwater discharge daily while non-stormwater discharges occur
- Hazardous waste should be regularly collected.
- A foreman or construction supervisor should monitor onsite hazardous waste storage and disposal procedures.
- Waste storage areas should be kept clean, well organized, and equipped with ample cleanup supplies as appropriate for the materials being stored.
- Perimeter controls, containment structures, covers, and liners should be repaired or replaced as needed to maintain proper function.
- Hazardous spills should be cleaned up and reported in conformance with the applicable Material Safety Data Sheet (MSDS) and the instructions posted at the project site.

- The National Response Center, at (800) 424-8802, should be notified of spills of federal reportable quantities in conformance with the requirements in 40 CFR parts 110, 117, and 302. Also notify the Governors Office of Emergency Services Warning Center at (916) 845-8911.
- A copy of the hazardous waste manifests should be provided.

References and Additional Resources

Blueprint for a Clean Bay: Best Management Practices to Prevent Stormwater Pollution from Construction Related Activities; Santa Clara Valley Nonpoint Source Pollution Control Program, 1995.

Construction Site Best Management Practices (BMPs) Manual, CTSW-RT-24-425.11.1, California Department of Transportation (Caltrans), March 2024.

Processes, Procedures and Methods to Control Pollution Resulting from All Construction Activity, 430/9-73-007, USEPA, 1973.

Stormwater Management for Construction Activities; Developing Pollution Prevention Plans and Best Management Practice, EPA 832-R-92005; USEPA, April 1992.

Contaminated Soil Management WM-7

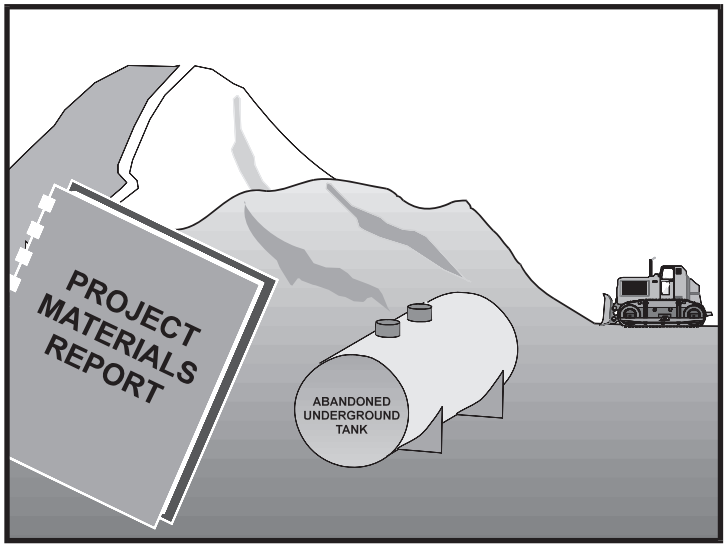

Categories

EC	Erosion Control	
SE	Sediment Control	
TC	Tracking Control	
WE	Wind Erosion Control	
NS	Non-Stormwater Management Control	
WM	Waste Management and Materials Pollution Control	☑

Legend:

☑ **Primary Objective**

☒ **Secondary Objective**

Description and Purpose

Prevent or reduce the discharge of pollutants to stormwater from contaminated soil and highly acidic or alkaline soils by conducting pre-construction surveys, inspecting excavations regularly, and remediating contaminated soil promptly.

Suitable Applications

Contaminated soil management is implemented on construction projects in highly urbanized or industrial areas where soil contamination may have occurred due to spills, illicit discharges, aerial deposition, past use and leaks from underground storage tanks.

Limitations

Contaminated soils that cannot be treated onsite must be disposed of offsite by a licensed hazardous waste hauler. The presence of contaminated soil may indicate contaminated water as well. See NS-2, Dewatering Operations, for more information.

The procedures and practices presented in this BMP are general. The contractor should identify appropriate practices and procedures for the specific contaminants known to exist or discovered onsite.

Implementation

Most owners and developers conduct pre-construction environmental assessments as a matter of routine. Contaminated soils are often identified during project planning and development with known locations identified in the plans, specifications and in the SWPPP. The contractor should review applicable reports and investigate appropriate call-outs in the

Targeted Constituents

Sediment	
Nutrients	☑
Trash	☑
Metals	☑
Bacteria	☑
Oil and Grease	☑
Organics	☑

Potential Alternatives

None

Copyright 2026 by the California Stormwater Quality Association

CASQA
CALIFORNIA STORMWATER QUALITY ASSOCIATION®

plans, specifications, and SWPPP. Recent court rulings holding contractors liable for cleanup costs when they unknowingly move contaminated soil highlight the need for contractors to confirm a site assessment is completed before earth moving begins.

The following steps will help reduce stormwater pollution from contaminated soil:

- Conduct thorough, pre-construction inspections of the site and review documents related to the site. If inspection or reviews indicated presence of contaminated soils, develop a plan before starting work.
- Look for contaminated soil as evidenced by discoloration, odors, differences in soil properties, abandoned underground tanks or pipes, or buried debris.
- Prevent leaks and spills. Contaminated soil can be expensive to treat and dispose of properly. However, addressing the problem before construction is much less expensive than after the structures are in place.
- The contractor may further identify contaminated soils by investigating:
  - Past site uses and activities
  - Detected or undetected spills and leaks
  - Acid or alkaline solutions from exposed soil or rock formations high in acid or alkaline forming elements
  - Contaminated soil as evidenced by discoloration, odors, differences in soil properties, abandoned underground tanks or pipes, or buried debris.
  - Suspected soils should be tested at a certified laboratory.

Education

- Have employees and subcontractors complete a safety training program which meets 29 CFR 1910.120 and 8 CCR 5192 covering the potential hazards as identified, prior to performing any excavation work at the locations containing material classified as hazardous.
- Educate employees and subcontractors in identification of contaminated soil and on contaminated soil handling and disposal procedures.
- Hold regular meetings to discuss and reinforce disposal procedures (incorporate into regular safety meetings).

Handling Procedures for Material with Aerially Deposited Lead (ADL)

- Materials from areas designated as containing (ADL) may, if allowed by the contract special provisions, be excavated, transported, and used in the construction of embankments and/or backfill.
- Excavation, transportation, and placement operations should result in no visible dust.
- Caution should be exercised to prevent spillage of lead containing material during transport.

- Quality should be monitored during excavation of soils contaminated with lead.

Handling Procedures for Contaminated Soils

- Minimize onsite storage. Contaminated soil should be disposed of properly in accordance with all applicable regulations. All hazardous waste storage will comply with the requirements in Title 22, CCR, Sections 66265.250 to 66265.260.
- Test suspected soils at an approved certified laboratory.
- Work with the local regulatory agencies to develop options for treatment or disposal if the soil is contaminated.
- Avoid temporary stockpiling of contaminated soils or hazardous material.
- Take the following precautions if temporary stockpiling is necessary:
  - Cover the stockpile with plastic sheeting or tarps.
  - Install a berm around the stockpile to prevent runoff from leaving the area.
  - Do not stockpile in or near storm drains or watercourses.
- Remove contaminated material and hazardous material on exteriors of transport vehicles and place either into the current transport vehicle or into the excavation prior to the vehicle leaving the exclusion zone.
- Monitor the air quality continuously during excavation operations at all locations containing hazardous material.
- Procure all permits and licenses, pay all charges and fees, and give all notices necessary and incident to the due and lawful prosecution of the work, including registration for transporting vehicles carrying the contaminated material and the hazardous material.
- Collect water from decontamination procedures and treat or dispose of it at an appropriate disposal site.
- Collect non-reusable protective equipment, once used by any personnel, and dispose of at an appropriate disposal site.
- Install temporary security fence to surround and secure the exclusion zone. Remove fencing when no longer needed.
- Excavate, transport, and dispose of contaminated material and hazardous material in accordance with the rules and regulations of the following agencies (the specifications of these agencies supersede the procedures outlined in this BMP):
  - United States Department of Transportation (USDOT)
  - United States Environmental Protection Agency (USEPA)
  - California Environmental Protection Agency (CAL-EPA)

- California Division of Occupation Safety and Health Administration (CAL-OSHA)
- Local regulatory agencies

Procedures for Underground Storage Tank Removals

- Prior to commencing tank removal operations, obtain the required underground storage tank removal permits and approval from the federal, state, and local agencies that have jurisdiction over such work.
- To determine if it contains hazardous substances, arrange to have tested, any liquid or sludge found in the underground tank prior to its removal.
- Following the tank removal, take soil samples beneath the excavated tank and perform analysis as required by the local agency representative(s).
- The underground storage tank, any liquid or sludge found within the tank, and all contaminated substances and hazardous substances removed during the tank removal and transported to disposal facilities permitted to accept such waste.

Water Control

- All necessary precautions and preventive measures should be taken to prevent the flow of water, including ground water, from mixing with hazardous substances or underground storage tank excavations. Such preventative measures may consist of, but are not limited to, berms, cofferdams, grout curtains, freeze walls, and seal course concrete or any combination thereof.
- If water does enter an excavation and becomes contaminated, such water, when necessary to proceed with the work, should be discharged to clean, closed top, watertight transportable holding tanks, treated, and disposed of in accordance with federal, state, and local laws.

Inspection and Maintenance

- Inspect and verify that activity–based BMPs are in place prior to the commencement of associated activities. While activities associated with the BMP are under way, inspect BMPs in accordance with General Permit requirements for the associated project type and risk level. It is recommended that at a minimum, BMPs be inspected weekly, prior to forecasted rain events, daily during extended rain events, and after the conclusion of rain events.
- Arrange for contractor's Water Pollution Control Manager, foreman, and/or construction supervisor to monitor onsite contaminated soil storage and disposal procedures.
- Monitor air quality continuously during excavation operations at all locations containing hazardous material.
- Coordinate contaminated soils and hazardous substances/waste management with the appropriate federal, state, and local agencies.
- Implement WM-4, Spill Prevention and Control, to prevent leaks and spills as much as possible.

References and Additional Resources

Blueprint for a Clean Bay: Best Management Practices to Prevent Stormwater Pollution from Construction Related Activities; Santa Clara Valley Nonpoint Source Pollution Control Program, 1995.

Processes, Procedures and Methods to Control Pollution Resulting from All Construction Activity, 430/9-73-007, USEPA, 1973.

Construction Site Best Management Practices (BMPs) Manual, CTSW-RT-24-425.11.1, California Department of Transportation (Caltrans), March 2024.

Stormwater Management for Construction Activities; Developing Pollution Prevention Plans and Best Management Practice, EPA 832-R-92005; USEPA, April 1992.

Concrete Waste Management WM-8

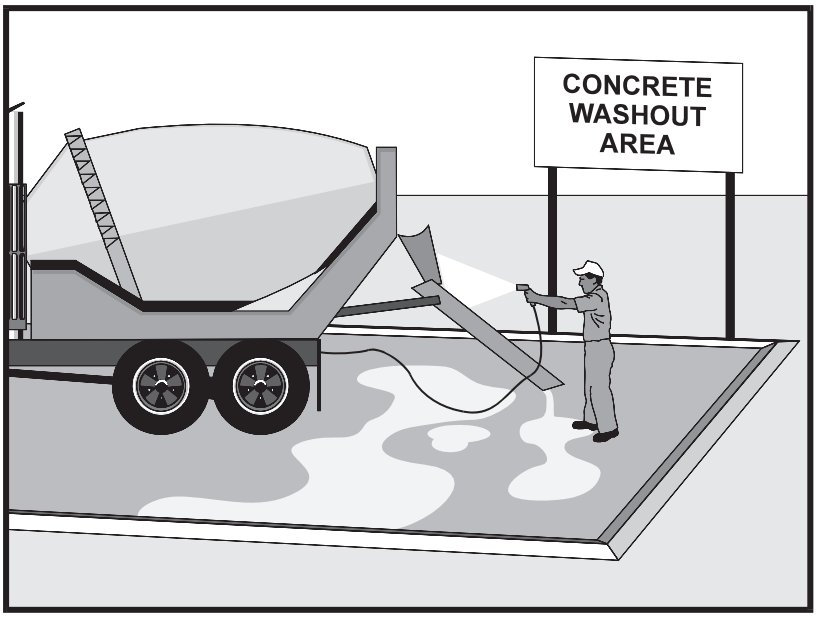

Categories

EC	Erosion Control	
SE	Sediment Control	
TC	Tracking Control	
WE	Wind Erosion Control	
NS	Non-Stormwater Management Control	☒
WM	Waste Management and Materials Pollution Control	☑

Legend:
☑ **Primary Category**
☒ **Secondary Category**

Targeted Constituents

Sediment	☑
Nutrients	
Trash	
Metals	☑
Bacteria	
Oil and Grease	
Organics	

Potential Alternatives

None

Copyright 2026 by the California Stormwater Quality Association

Description and Purpose

Prevent the discharge of pollutants to stormwater from concrete waste by conducting washout onsite or offsite in a designated area, and by employee and subcontractor training.

The General Permit incorporates Numeric Action Levels (NAL) for pH (see Section 2 of this handbook to determine your project's risk level and if you are subject to these requirements).

Many types of construction materials, including mortar, concrete, stucco, cement and block and their associated wastes have basic chemical properties that can raise pH levels outside of the permitted range. Additional care should be taken when managing these materials to prevent them from coming into contact with stormwater flows and raising pH to levels outside the accepted range.

Suitable Applications

Concrete waste management procedures and practices are implemented on construction projects where:

- Concrete is used as a construction material or where concrete dust and debris result from demolition activities.
- Slurries containing Portland cement concrete (PCC) are generated, such as from saw cutting, coring, grinding, grooving, and hydro-concrete demolition.
- Concrete trucks and other concrete-coated equipment are washed onsite.

CASQA
CALIFORNIA STORMWATER QUALITY ASSOCIATION®

- Mortar-mixing stations exist.
- Stucco mixing and spraying.
- See also NS-8, Vehicle and Equipment Cleaning.

Limitations

- Offsite washout of concrete wastes may not always be possible.
- Multiple washouts may be needed to assure adequate capacity and to allow for evaporation.

Implementation

The following steps will help reduce stormwater pollution from concrete wastes:

- Incorporate requirements for concrete waste management into material supplier and subcontractor agreements.
- Store dry and wet materials under cover, away from drainage areas. Refer to WM-1, Material Delivery and Storage for more information.
- Avoid mixing excess amounts of concrete.
- Perform washout of concrete trucks in designated areas only, where washout will not reach stormwater.
- Do not wash out concrete trucks into storm drains, open ditches, streets, streams or onto the ground. Trucks should always be washed out into designated facilities.
- Do not allow excess concrete to be dumped onsite, except in designated areas.
- For onsite washout:
    - On larger sites, it is recommended to locate washout areas at least 50 feet from storm drains, open ditches, or water bodies. Do not allow runoff from this area by constructing a temporary pit or bermed area large enough for liquid and solid waste.
    - Washout wastes into the temporary washout where the concrete can set, be broken up, and then disposed properly.
    - Washouts shall be implemented in a manner that prevents leaching to underlying soils. Washout containers must be water tight and washouts on or in the ground must be lined with a suitable impervious liner, typically a plastic type material.
- Do not wash sweepings from exposed aggregate concrete into the street or storm drain. Collect and return sweepings to aggregate base stockpile or dispose in the trash.
- See typical concrete washout installation details at the end of this fact sheet.

Education

- Educate employees, subcontractors, and suppliers on the concrete waste management techniques described herein.

- Arrange for contractor's superintendent or representative to oversee and enforce concrete waste management procedures.
- Discuss the concrete management techniques described in this BMP (such as handling of concrete waste and washout) with the ready-mix concrete supplier before any deliveries are made.

Concrete Demolition Wastes

- Stockpile concrete demolition waste in accordance with BMP WM-3, Stockpile Management.
- Dispose of or recycle hardened concrete waste in accordance with applicable federal, state or local regulations.

Concrete Slurry Wastes

- PCC and AC waste should not be allowed to enter storm drains or watercourses.
- PCC and AC waste should be collected and disposed of or placed in a temporary concrete washout facility (as described in Onsite Temporary Concrete Washout Facility, Concrete Transit Truck Washout Procedures, below).
- A foreman or construction supervisor should monitor onsite concrete working tasks, such as saw cutting, coring, grinding and grooving to ensure proper methods are implemented.
- Saw-cut concrete slurry should not be allowed to enter storm drains or watercourses. Residue from grinding operations should be picked up by means of a vacuum attachment to the grinding machine or by sweeping. Saw cutting residue should not be allowed to flow across the pavement and should not be left on the surface of the pavement. See also NS-3, Paving and Grinding Operations; and WM-10, Liquid Waste Management.
- Concrete slurry residue should be disposed in a temporary washout facility (as described in Onsite Temporary Concrete Washout Facility, Concrete Transit Truck Washout Procedures, below) and allowed to dry. Dispose of dry slurry residue in accordance with WM-5, Solid Waste Management.

Onsite Temporary Concrete Washout Facility, Transit Truck Washout Procedures

- Temporary concrete washout facilities should be located a minimum of 50 ft from storm drain inlets, open drainage facilities, and watercourses. Each facility should be located away from construction traffic or access areas to prevent disturbance or tracking.
- A sign should be installed adjacent to each washout facility to inform concrete equipment operators to utilize the proper facilities.
- Temporary concrete washout facilities should be constructed above grade or below grade at the option of the contractor. Temporary concrete washout facilities should be constructed and maintained in sufficient quantity and size to contain all liquid and concrete waste generated by washout operations.

- Temporary washout facilities should have a temporary pit or bermed areas of sufficient volume to completely contain all liquid and waste concrete materials generated during washout procedures.
- Temporary washout facilities should be lined to prevent discharge to the underlying ground or surrounding area.
- Washout of concrete trucks should be performed in designated areas only.
- Only concrete from mixer truck chutes should be washed into concrete wash out.
- Concrete washout from concrete pumper bins can be washed into concrete pumper trucks and discharged into designated washout area or properly disposed of or recycled offsite.
- Once concrete wastes are washed into the designated area and allowed to harden, the concrete should be broken up, removed, and disposed of per WM-5, Solid Waste Management. Dispose of or recycle hardened concrete on a regular basis.
- Temporary Concrete Washout Facility (Type Above Grade)
    - Temporary concrete washout facility (type above grade) should be constructed as shown on the details at the end of this BMP, with a recommended minimum length and minimum width of 10 ft; however, smaller sites or jobs may only need a smaller washout facility. With any washout, always maintain a sufficient quantity and volume to contain all liquid and concrete waste generated by washout operations.
    - Materials used to construct the washout area should conform to the provisions detailed in their respective BMPs (e.g., SE-8 Sandbag Barrier).
    - Plastic lining material should be a minimum of 10 mil in polyethylene sheeting and should be free of holes, tears, or other defects that compromise the impermeability of the material.
    - Alternatively, portable removable containers can be used as above grade concrete washouts. Also called a “roll-off”; this concrete washout facility should be properly sealed to prevent leakage and should be removed from the site and replaced when the container reaches 75% capacity.
- Temporary Concrete Washout Facility (Type Below Grade)
    - Temporary concrete washout facilities (type below grade) should be constructed as shown on the details at the end of this BMP, with a recommended minimum length and minimum width of 10 ft. The quantity and volume should be sufficient to contain all liquid and concrete waste generated by washout operations.
    - Lath and flagging should be commercial type.
    - Plastic lining material should be a minimum of 10 mil polyethylene sheeting and should be free of holes, tears, or other defects that compromise the impermeability of the material.

- The base of a washout facility should be free of rock or debris that may damage a plastic liner.

Removal of Temporary Concrete Washout Facilities

- When temporary concrete washout facilities are no longer required for the work, the hardened concrete should be removed and properly disposed or recycled in accordance with federal, state or local regulations. Materials used to construct temporary concrete washout facilities should be removed from the site of the work and properly disposed or recycled in accordance with federal, state or local regulations.

- Holes, depressions or other ground disturbance caused by the removal of the temporary concrete washout facilities should be backfilled and repaired.

Inspection and Maintenance

- BMPs must be inspected in accordance with General Permit requirements for the associated project type and risk level. It is recommended that at a minimum, BMPs be inspected weekly, prior to forecasted rain events, daily during extended rain events, and after the conclusion of rain events.

- Temporary concrete washout facilities should be maintained to provide adequate holding capacity with a minimum freeboard of 4 in. for above grade facilities and 12 in. for below grade facilities. Maintaining temporary concrete washout facilities should include removing and disposing of hardened concrete and returning the facilities to a functional condition. Hardened concrete materials should be removed and properly disposed or recycled in accordance with federal, state or local regulations.

- Washout facilities must be cleaned, or new facilities must be constructed and ready for use once the washout is 75% full.

- Inspect washout facilities for damage (e.g. torn liner, evidence of leaks, signage, etc.). Repair all identified damage.

References and Additional Resources

Blueprint for a Clean Bay: Best Management Practices to Prevent Stormwater Pollution from Construction Related Activities; Santa Clara Valley Nonpoint Source Pollution Control Program, 1995.

Construction Site Best Management Practices (BMPs) Manual, CTSW-RT-24-425.11.1, California Department of Transportation (Caltrans), March 2024.

Stormwater Management for Construction Activities; Developing Pollution Prevention Plans and Best Management Practice, EPA 832-R-92005; USEPA, April 1992.

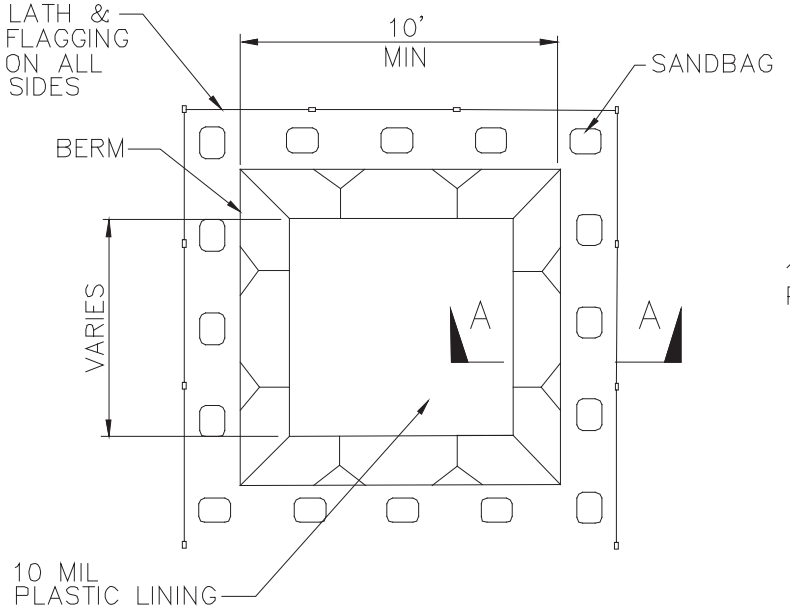

PLAN
NOT TO SCALE
TYPE "BELOW GRADE"

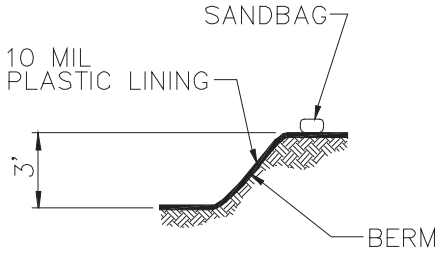

SECTION A–A
NOT TO SCALE

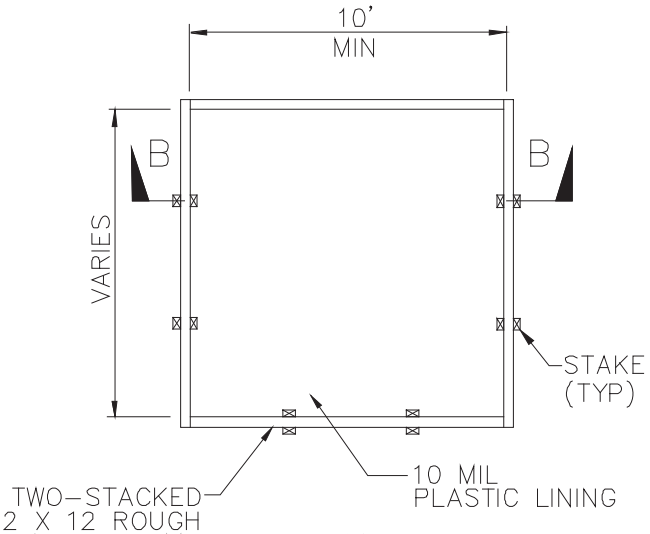

PLAN
NOT TO SCALE
TYPE "ABOVE GRADE"

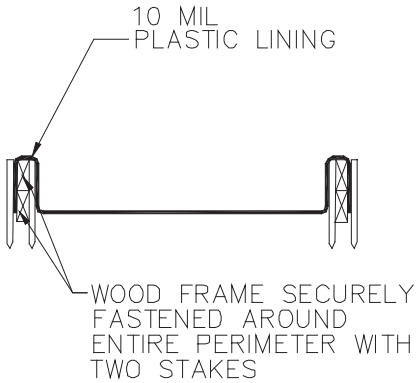

SECTION B–B
NOT TO SCALE

NOTES

1. ACTUAL LAYOUT DETERMINED IN FIELD.
2. THE CONCRETE WASHOUT SIGN SHALL BE INSTALLED WITHIN 30 FT. OF THE TEMPORARY CONCRETE WASHOUT FACILITY.

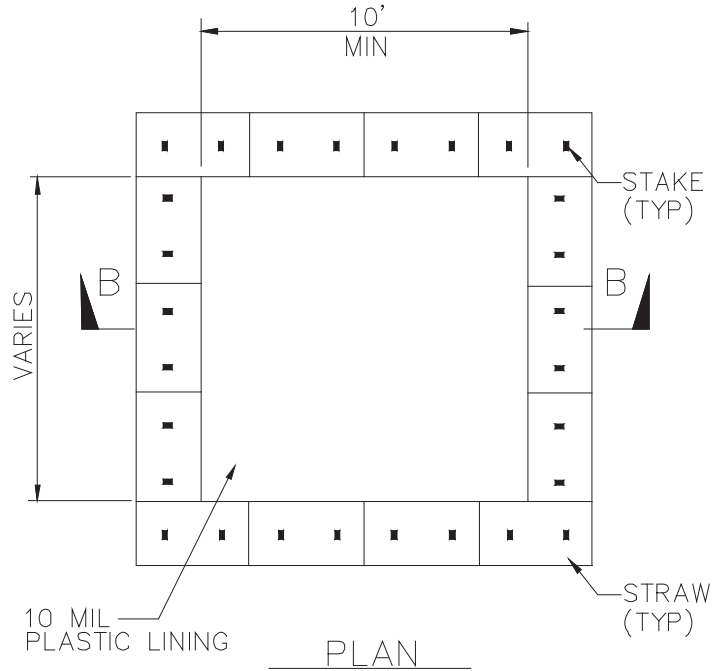

PLAN
NOT TO SCALE
TYPE "ABOVE GRADE"
WITH STRAW BALES

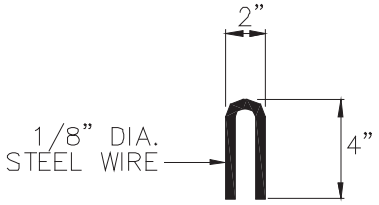

STAPLE DETAIL

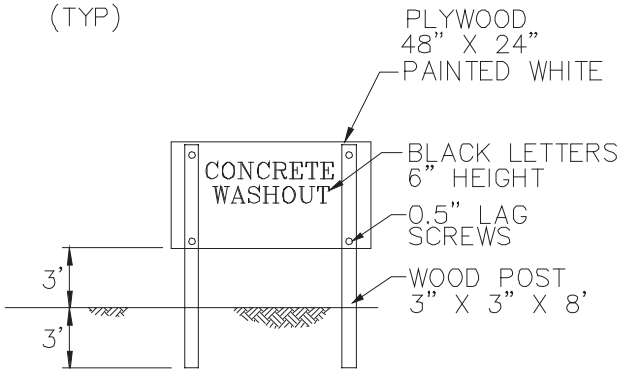

CONCRETE WASHOUT
SIGN DETAIL
(OR EQUIVALENT)

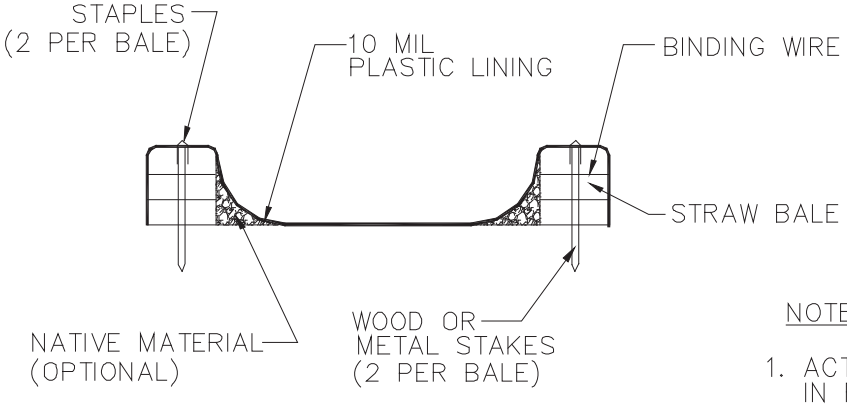

SECTION B–B
NOT TO SCALE

NOTES

1. ACTUAL LAYOUT DETERMINED IN FIELD.
2. THE CONCRETE WASHOUT SIGN SHALL BE INSTALLED WITHIN 30 FT. OF THE TEMPORARY CONCRETE WASHOUT FACILITY.

Sanitary/Septic Waste Management WM-9

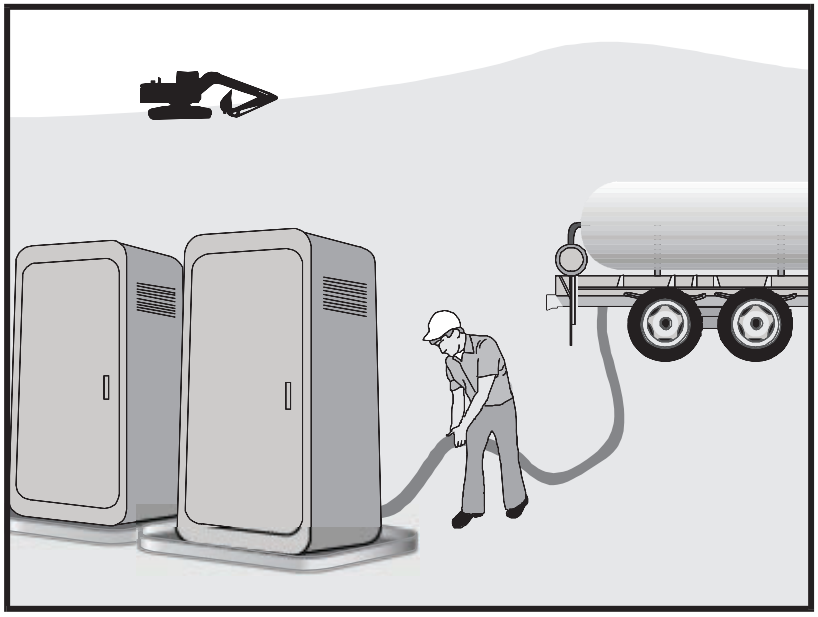

Description and Purpose

Proper sanitary and septic waste management prevent the discharge of pollutants to stormwater from sanitary and septic waste by providing convenient, well-maintained facilities, and arranging for regular service and disposal.

Suitable Applications

Sanitary septic waste management practices are suitable for use at all construction sites that use temporary or portable sanitary and septic waste systems.

Limitations

None identified.

Implementation

Sanitary or septic wastes should be treated or disposed of in accordance with state and local requirements. In many cases, one contract with a local facility supplier will be all that it takes to make sure sanitary wastes are properly disposed.

Storage and Disposal Procedures

- Temporary sanitary facilities should be located away from drainage facilities, watercourses, and from traffic circulation. If site conditions allow, place portable facilities a minimum of 50 feet from drainage conveyances and traffic areas. When subjected to high winds or risk of high winds, temporary sanitary facilities should be secured to prevent overturning.

Categories

EC	Erosion Control	
SE	Sediment Control	
TC	Tracking Control	
WE	Wind Erosion Control	
NS	Non-Stormwater Management Control	
WM	Waste Management and Materials Pollution Control	☑

Legend:

☑ **Primary Category**

☒ **Secondary Category**

Targeted Constituents

Sediment	
Nutrients	☑
Trash	☑
Metals	
Bacteria	☑
Oil and Grease	
Organics	☑

Potential Alternatives

None

Copyright 2026 by the California Stormwater Quality Association

- Temporary sanitary facilities must be equipped with containment to prevent discharge of pollutants to the stormwater drainage system of the receiving water.
- Consider safety as well as environmental implications before placing temporary sanitary facilities.
- Wastewater should not be discharged or buried within the project site.
- Sanitary and septic systems that discharge directly into sanitary sewer systems, where permissible, should comply with the local health agency, city, county, and sewer district requirements.
- Only reputable, licensed sanitary and septic waste haulers should be used.
- Sanitary facilities should be located in a convenient location.
- Temporary septic systems should treat wastes to appropriate levels before discharging.
- If using an onsite disposal system (OSDS), such as a septic system, local health agency requirements must be followed.
- Temporary sanitary facilities that discharge to the sanitary sewer system should be properly connected to avoid illicit discharges.
- Sanitary and septic facilities should be maintained in good working order by a licensed service.
- Regular waste collection by a licensed hauler should be arranged before facilities overflow.
- If a spill does occur from a temporary sanitary facility, follow federal, state and local regulations for containment and clean-up.

Education

- Educate employees, subcontractors, and suppliers on sanitary and septic waste storage and disposal procedures.
- Educate employees, subcontractors, and suppliers of potential dangers to humans and the environment from sanitary and septic wastes.
- Instruct employees, subcontractors, and suppliers in identification of sanitary and septic waste.
- Hold regular meetings to discuss and reinforce the use of sanitary facilities (incorporate into regular safety meetings).
- Establish a continuing education program to indoctrinate new employees.

Inspection and Maintenance

- BMPs must be inspected in accordance with General Permit requirements for the associated project type and risk level. It is recommended that at a minimum, BMPs be inspected

weekly, prior to forecasted rain events, daily during extended rain events, and after the conclusion of rain events.

- Arrange for regular waste collection.
- If high winds are expected, portable sanitary facilities must be secured with spikes or weighed down to prevent over turning.
- If spills or leaks from sanitary or septic facilities occur that are not contained and discharge from the site, non-visible sampling of site discharge may be required. Refer to the General Permit or to your project specific Construction Site Monitoring Plan to determine if and where sampling is required.

References and Additional Resources

Construction Site Best Management Practices (BMPs) Manual, CTSW-RT-24-425.11.1, California Department of Transportation (Caltrans), March 2024.

Stormwater Management for Construction Activities; Developing Pollution Prevention Plans and Best Management Practice, EPA 832-R-92005; USEPA, April 1992.

Liquid Waste Management WM-10

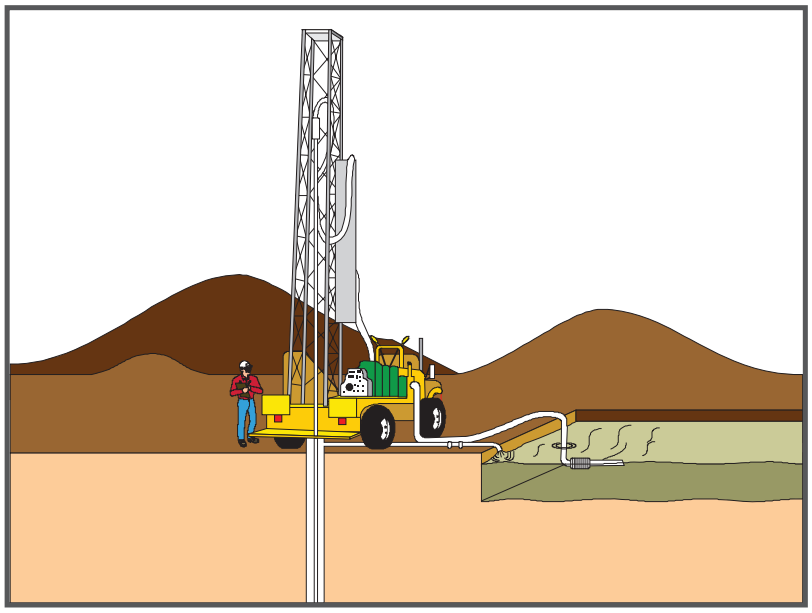

Categories

EC	Erosion Control	
SE	Sediment Control	
TC	Tracking Control	
WE	Wind Erosion Control	
NS	Non-Stormwater Management Control	
WM	Waste Management and Materials Pollution Control	☑

Legend:

☑ **Primary Objective**

☒ **Secondary Objective**

Targeted Constituents

Sediment	☑
Nutrients	☑
Trash	☑
Metals	☑
Bacteria	
Oil and Grease	☑
Organics	

Potential Alternatives

None

Description and Purpose

Liquid waste management includes procedures and practices to prevent discharge of pollutants to the storm drain system or to watercourses as a result of the creation, collection, and disposal of non-hazardous liquid wastes.

Suitable Applications

Liquid waste management is applicable to construction projects that generate any of the following non-hazardous by-products, residuals, or wastes:

- Drilling slurries and drilling fluids
- Grease-free and oil-free wastewater and rinse water
- Dredgings
- Other non-stormwater liquid discharges not permitted by separate permits

Limitations

- Disposal of some liquid wastes may be subject to specific laws and regulations or to requirements of other permits secured for the construction project (e.g., NPDES permits, Army Corps permits, Coastal Commission permits, etc.).

Copyright 2026 by the California Stormwater Quality Association

CASQA
CALIFORNIA STORMWATER QUALITY ASSOCIATION®

- Liquid waste management does not apply to dewatering operations (NS-2 Dewatering Operations), solid waste management (WM-5, Solid Waste Management), hazardous wastes (WM-6, Hazardous Waste Management), or concrete slurry residue (WM-8, Concrete Waste Management).

- Typical permitted non-stormwater discharges can include: water line flushing; landscape irrigation; diverted stream flows; rising ground waters; uncontaminated pumped ground water; discharges from potable water sources; foundation drains; irrigation water; springs; water from crawl space pumps; footing drains; lawn watering; flows from riparian habitats and wetlands; and discharges or flows from emergency fire fighting activities.

Implementation

General Practices

- Instruct employees and subcontractors how to safely differentiate between non-hazardous liquid waste and potential or known hazardous liquid waste.

- Instruct employees, subcontractors, and suppliers that it is unacceptable for any liquid waste to enter any storm drainage device, waterway, or receiving water.

- Educate employees and subcontractors on liquid waste generating activities and liquid waste storage and disposal procedures.

- Hold regular meetings to discuss and reinforce disposal procedures (incorporate into regular safety meetings).

- Verify which non-stormwater discharges are permitted by the statewide NPDES permit; different regions might have different requirements not outlined in this permit.

- Apply NS-8, Vehicle and Equipment Cleaning for managing wash water and rinse water from vehicle and equipment cleaning operations.

Containing Liquid Wastes

- Drilling residue and drilling fluids should not be allowed to enter storm drains and watercourses and should be disposed of.

- If an appropriate location is available, drilling residue and drilling fluids that are exempt under Title 23, CCR § 2511(g) may be dried by infiltration and evaporation in a containment facility constructed in conformance with the provisions concerning the Temporary Concrete Washout Facilities detailed in WM-8, Concrete Waste Management.

- Liquid wastes generated as part of an operational procedure, such as water-laden dredged material and drilling mud, should be contained and not allowed to flow into drainage channels or receiving waters prior to treatment.

- Liquid wastes should be contained in a controlled area such as a holding pit, sediment basin, roll-off bin, or portable tank.

- Containment devices must be structurally sound and leak free.

- Containment devices must be of sufficient quantity or volume to completely contain the liquid wastes generated.
- Precautions should be taken to avoid spills or accidental releases of contained liquid wastes. Apply the education measures and spill response procedures outlined in WM-4, Spill Prevention and Control.
- Containment areas or devices should not be located where accidental release of the contained liquid can threaten health or safety or discharge to water bodies, channels, or storm drains.

Capturing Liquid Wastes

- Capture all liquid wastes that have the potential to affect the storm drainage system (such as wash water and rinse water from cleaning walls or pavement), before they run off a surface.
- Do not allow liquid wastes to flow or discharge uncontrolled. Use temporary dikes or berms to intercept flows and direct them to a containment area or device for capture.
- Use a sediment trap (SE-3, Sediment Trap) for capturing and treating sediment laden liquid waste or capture in a containment device and allow sediment to settle.

Disposing of Liquid Wastes

- A typical method to handle liquid waste is to dewater the contained liquid waste, using procedures such as described in NS-2, Dewatering Operations, and SE-2, Sediment Basin, and dispose of resulting solids per WM-5, Solid Waste Management.
- Methods of disposal for some liquid wastes may be prescribed in Water Quality Reports, NPDES permits, Environmental Impact Reports, 401 or 404 permits, and local agency discharge permits, etc. Review the SWPPP to see if disposal methods are identified.
- Liquid wastes, such as from dredged material, may require testing and certification whether it is hazardous or not before a disposal method can be determined.
- For disposal of hazardous waste, see WM-6, Hazardous Waste Management.
- If necessary, further treat liquid wastes prior to disposal. Treatment may include, though is not limited to, sedimentation, filtration, and chemical neutralization.

Inspection and Maintenance

- Inspect and verify that activity–based BMPs are in place prior to the commencement of associated activities. While activities associated with the BMP are under way, inspect weekly during the rainy season and of two-week intervals in the non-rainy season to verify continued BMP implementation.
- Inspect BMPs subject to non-stormwater discharge daily while non-stormwater discharges occur.

- Remove deposited solids in containment areas and capturing devices as needed and at the completion of the task. Dispose of any solids as described in WM-5, Solid Waste Management.
- Inspect containment areas and capturing devices and repair as needed.

References and Additional Resources

Construction Site Best Management Practices (BMPs) Manual, CTSW-RT-24-425.11.1, California Department of Transportation (Caltrans), March 2024.

Appendix L
FA Procedure MA.MG.PRC.056

Facilities
BERKELEY LAB

FA PROCEDURE:
Rainwater Disposal

Effective Date: 10-1-17
Document Number: MA.MG.PRC.056 (was OPER 056)
Revision Number: 5
Next Review Date: 9-13-2026

---

1. PROCEDURE PURPOSE

This document describes the process for determining if liquid found in a secondary containment or holding structure is rainwater or a result of a spill from an outdoor oil-filled transformer and the method for disposal.

2. APPLICABILITY

Following a rain storm, it must be determined whether liquid found in a secondary containment structure open to precipitation or a holding tank that stores accumulated rainwater can be considered only rainwater and disposed of accordingly. If liquid thought to be rainwater is discovered in a secondary containment or holding tank structure, a thorough inspection of the system must be performed to determine whether the liquid is rainwater or is the result of a spill from an outdoor oil-filled transformer.

Environmental Service Group (ESG) will notify the Facility Division Plant Maintenance Technicians (PMTs) Supervisor, Mechanical Technical Manager after either an individual or consecutive rain events that produce 3” or more of total rainfall.

3. PROCESS

3.1 Special Instructions

3.1.1 Special Skills Required

Up-to-date training in spill prevention, control, and countermeasures (SPCC).

3.1.2 Personnel Scheduled to Perform this Procedure

Plant Maintenance Technicians are responsible for all secondary containments.

3.2 Work Steps

3.2.1 Review Contaminant List

Possible contaminants for each secondary containment structure are listed in **Appendix A** accompanying this procedure. Review before examining secondary containments.

3.2.2 Check for Evidence of Contamination

Check for any evidence of rainwater contamination (e.g., color, clarity, odor, oil sheen). If there is no evidence of contamination, go to the next step (3.2.3). If there is evidence of contamination, go to step 3.2.5. Record results in the rainwater disposal log.

3.2.3 If No Evidence of Contamination

If there is no evidence of rainwater contamination or a release from the tank system, release rainwater from containment onto ground, or pump or drain it into the stormwater system. If rainwater is drained through a berm drain, replace the drain cap and shut and lock the drain valve after discharging the rainwater.

At the Bank 80 power supply pad located on the west side of Building 88, purge accumulated rainwater from the holding tank by inserting a submersible pump into the tank and discharging the water onto the vegetated slope adjacent to the tank. Disperse the water over a large area of vegetation so as not to create rill erosion[1].

[1] Rill erosion occurs when runoff water forms small channels as it concentrates down a slope.

3.2.4 Record Discharge Results

Record discharge and operator name and signature in the Rainwater Disposal log. Record must include:

- Time and date of discharge
- Tank/equipment identification and location
- Results of visual inspection of contents

Records must be kept for at least three years and be made available for review at request of EHS or regulatory personnel, such as the City of Berkeley.

3.2.5 If Evidence of Contamination

If there is evidence of rainwater contamination (color, odor, oil sheen), follow the next steps below. If hazardous constituents are present, immediately initiate spill response procedures and notify EHS (Step 3.2.8). Containerize, label, store in a Waste Accumulation Area and manage as hazardous waste any contaminated rainwater. Submit hazardous waste requisitions to the WMG. Alternatively, a qualified external contractor may collect the hazardous waste instead of internally managing the waste.

3.2.6 Check for Signs of Leakage

Check transformers or electrical switches for signs of leakage (e.g., drips, stains, wet spots, cracks, bulges).

3.2.7 Record Results

Record inspection results, EHS notification, and signature in the Rainwater Disposal Log.

3.2.8 Notify EHS

Notify EHS Program SME - ESG Stormwater Monitoring (ehs.lbl.gov/contact/) of rainwater contamination. If inspection is inconclusive, the ESG Stormwater SME must sample and analyze the liquid, which must be disposed of properly based on results.

3.2.9 Record Final Results

If applicable, the ESG Stormwater Discharges SME will provide the results of chemical analysis to the Facilities Maintenance Supervisor. These analytical results will be maintained with the applicable Rainwater Disposal Log. The final disposition of the rainwater (released or disposed of as hazardous waste) is recorded in the Rainwater Disposal Log, section 3. The Facilities Maintenance Supervisor and an authorized ESG Stormwater SME must sign log sheets regarding contaminated rainwater in section 6 of the Rainwater Disposal Log.

4. ROLES AND RESPONSIBILITIES

The list below emphasizes the roles and responsibilities pertinent to only this procedure.

4.1 Facilities Division

- Maintain accurate inventory of secondary containment locations.
- Upon notification from EHS, perform secondary containment inspections and rainwater release.
- Notify ESG Stormwater SME if hazardous constituents are detected during inspections.
- Containerize, label, store in a Waste Accumulation Area and manage as hazardous waste any contaminated rainwater. Submit hazardous waste requisition to the WMG.
- Take the lead for a spill from Facilities equipment and notify EHS.
- Maintain records on FA equipment and completed Rainwater Disposal logs and any analytical reports documenting contaminated rainwater for at least 3 years; records to be completed for regulatory agencies or City of Berkeley inspections.
- Discharge any non-contaminated rainwater.
- Maintain corresponding FA procedures.

4.2 Environment, Health & Safety

- Provide awareness level training to Facilities personnel on secondary containment inspection procedures in SPCC briefings.
- Notify PMT Day Shift Supervisor after an individual or consecutive rain events produce 3” or more of total rainfall. Provide the notification via email and copy the following personnel:
  - Facilities Technical Compliance Specialist(s)
  - ESG Environmental Specialist
- ESG will provide spill response support in the event hazardous constituents are detected. If the spill is released to the environment, ESG will notify the appropriate regulatory agencies.
- The ESG Stormwater SME will support sample collection and analysis of suspected contaminated water.
- ESG will provide results of chemical analyses to the Facilities PMT Day Shift Supervisor.
- The WMG will pick-up requisitioned contaminated rainwater and dispose of it properly.

5. DEFINITIONS

TERM	DEFINITION
ESG	EH&S, Environmental Services Group
FA	Facilities
SME	Subject Matter Expert
SWPPP	Stormwater Pollution Prevention Plan
WMG	EH&S, Waste Management Group

6. REFERENCES

6.1 Source Requirements Documents

Requirement	Title
40 CFR 112	Oil Pollution Prevention

6.2 Released Implementing Documents

Document	Section
LBNL's Industrial SWPPP	Section 4 Best Management Practices, 4.2 Advanced BMPs, 4.21 Secondary Containment Structures

7. PROCESS MAP

N/A

8. METRICS

N/A

9. CONTACT

Questions on this procedure should be directed to:
Facilities, Department Head, Utilities & Maintenance
Facilities, PMT Supervisor
Facilities, Technical Compliance Specialists
EHS Environmental Services Group (environment@lbl.gov)

10. REVISION HISTORY LOG

Facilities
BERKELEY LAB

REVISION NUMBER	REVISION DATE	BRIEF DESCRIPTION OF CHANGES MADE	NAME OF PERSON MAKING CHANGE
1	**N/A**	**N/A**	**N/A**
2	**N/A**	**N/A**	**N/A**
3	**N/A**	**N/A**	**N/A**
4	10-6-17	Existing FA procedure OPER-056 was reproduced in new procedure template	Laura Chen
5	06-14-23	Updated procedure to include new transformer location, updated maps and administrative changes, Added Bank 80 purge method. Provided rainfall accumulation criteria for ESG to notify the PMTs.	Bernadette Santos, Mike Botello, Brendan Mulholland, Yvonne Chavez, Erik Zalkin, Steve Alford

11. DOCUMENT INFORMATION

Title: Rainwater Disposal

Document Number MA.MG.PRC.056 (was OPER-056)

Effective date: 10-1-17

Revision number 5

Next review date: 9-13-2026

12. PROCEDURE APPROVALS

The signatures below document the approval of this procedure.

REVIEWER APPROVER AUTHOR	TITLE	NAME	SIGNATURE	DATE
Author	(Existing Procedure)	Facilities Division		
Reviewer	Facilities Compliance Specialist	Mike Botello		09 / 14 / 2023
Reviewer	ESG Environmental Protection Team Manager	Jim Buehler	Jim Buehler	09 / 14 / 2023
Reviewer	ESG Stormwater SME	Brendan Mulholland		09 / 13 / 2023
Reviewer	ESG SPCC SME	Bernadette Santos		09 / 14 / 2023
Approver	FA Dept. Head, Utilities & Maintenance	Ryan Velasco	Ryan Velasco	09 / 18 / 2023

Doc ID: 67eb5e4ee5d031704d2625ff5e3f6ab7afc5e134

Facilities
BERKELEY LAB

Appendix A:
List of Possible Contaminants in Secondary Containment Structures

Secondary Containment	Possible Contaminants	Release By	Location of Valves or Pump
Bldg 6 Transformer Pad Lower Sump, outside	Transformer oil No PCBs	Portable trash pump to be installed	East end of the Bldg.
Bldg 6 Transformer Pad in Upper Pad, 2 in Lower Pad	Transformer oil No PCBs	4 locked valves	East end of the Bldg.
Bldg 27, Transformer CTS-HVPS-1, Sump	Transformer oil	1 valve; locked	Northwest corner of containment pad
Bldg 37, Bank 218	Transformer oil	Locked valve	Upper pad
Bldg 46 So. End, Bank 49 Sump	Silicone transformer oil No PCBs	Portable trash pump to be installed	Between 46 & 47
Bldg 50, Bank 25 Pad Sump	Transformer oil No PCBs	Pump	West end of containment pad.
Bldg 58, Bank 36 & 158	Possible PCBs to 7 ppm	1 valve, locked	Locked valve bottom of containment sump
Bldg 66, Bank 215	Transformer oil	Locked valve	Between 62 & 66, 1st floor-on wall
Bldg 69 Sub	Silicone transformer oil No PCBs.	1 locked valve	East side of containment pad
Bldg 70, Bank 70, OS-1-70, Bank 30	Transformer oil	Locked valve	In transformer pad
Bldg 70A, Bank 31	Diala AX transformer oil No PCBs	2 locked valves	East end of containment pad.
Bldg 77, Bank 72	Diala AX transformer oil No PCBs	1 locked valve	SW side of pad
Building 88, Bank 80	Transformer oil	Submersible pump	Pump tank opening on top of tank
Bldg 90, Bank 90	Diala AX transformer oil No PCBs	1 locked valve	West end of containment pad
Bldg 91, Bank 772	Transformer oil, No PCBs	1 locked valve	West end of containment pad
Portable Containment Berms (e.g. fueling truck)	Diesel	Varies	N/A

Doc ID: 67eb5e4ee5d031704d2625ff5e3f6ab7afc5e134

Facilities
BERKELEY LAB

Appendix B:
Secondary Containment Locations

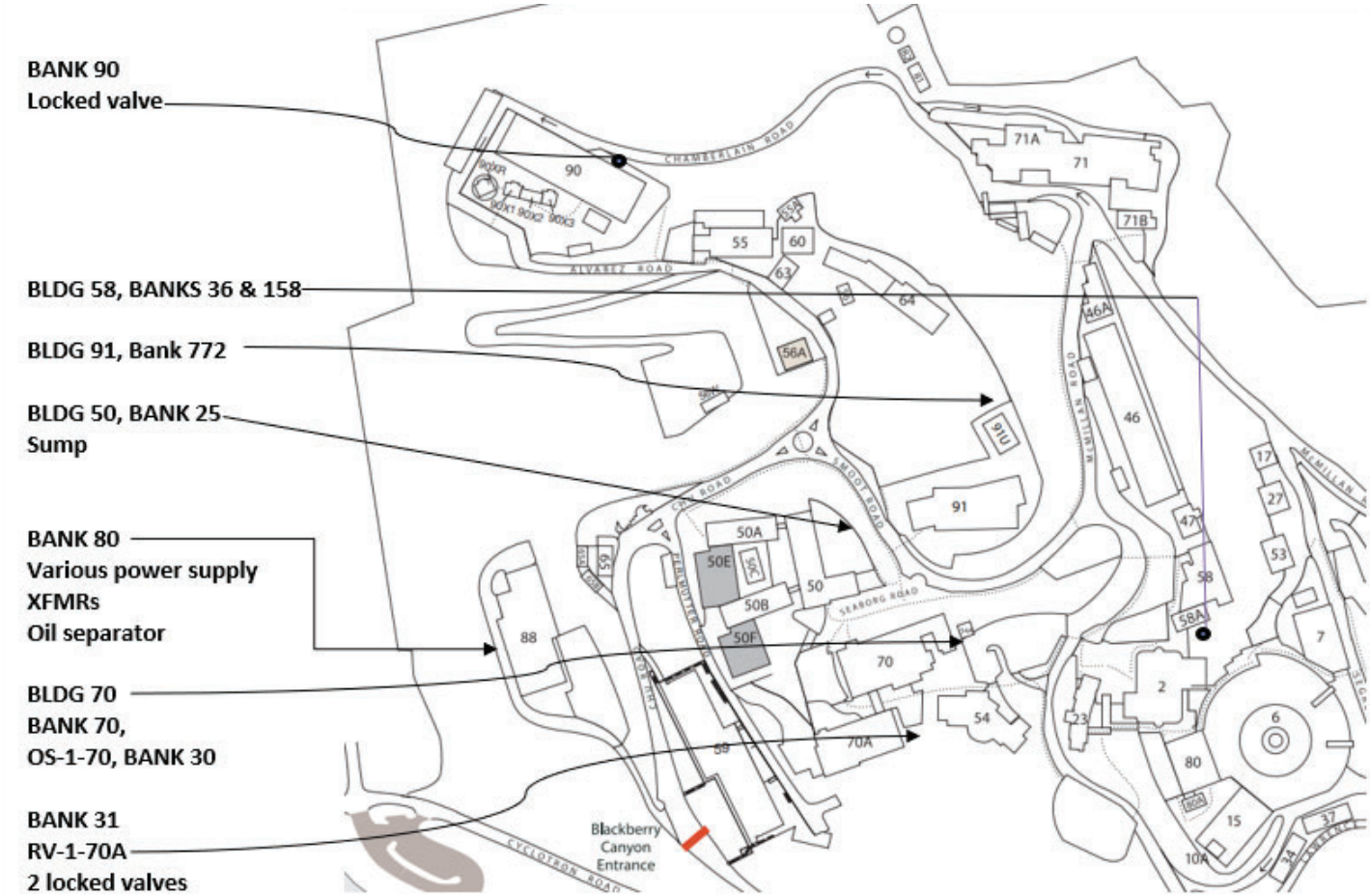

Facilities
BERKELEY LAB

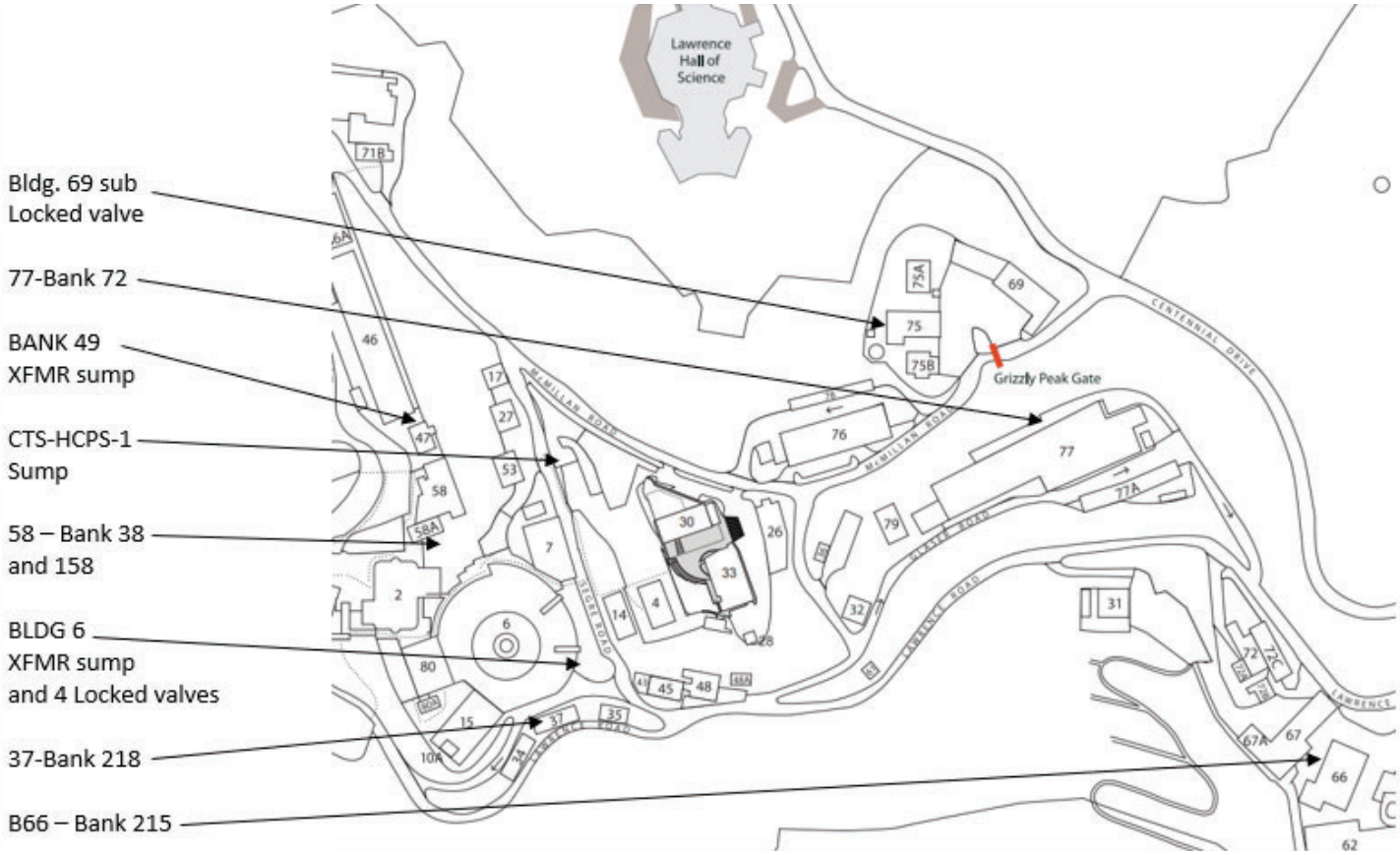

Doc ID: 67eb5e4ee5d031704d2625ff5e3f6ab7afc5e134

Facilities
BERKELEY LAB

Rainwater Disposal Log - Inspection Checklist (Appendix C of FA: Rainwater Disposal)

Complete log entries in accordance with Facilities Dept procedure - Rainwater Disposal.

SECONDARY CONTAINMENT UNIT	
UNIT LOCATION	

POSSIBLE CONTAMINANTS ***(Refer to Appendix A within FA: Rainwater Procedure)*:**

☐ PCB ☐ Transformer Oil ☐ Other (describe): _____

DATE		OPERATOR NAME	

1. **Is there any evidence of rainwater contamination (e.g., color, clarity, odor, oil sheet?)** ☐ YES ☐ NO

If yes, describe: _____

Rainwater Discharge Information *(not contaminated)*

2. **Time of Discharge:** ____ : ____ am / pm

Operator Signature: _____

Contaminated Rainwater Information, *if applicable*

3. **Results of chemical analysis of rainwater, if any (attach extra pages to form, if necessary)**

4. **Final disposition of rainwater:** ☐ Released ☐ Disposed of hazardous waste
☐ Other (please specify): _____

Authorization

5. **Authorized Facilities representative and authorized EHS representative must sign below to approve of contaminated rainwater:**

_____	_____
NAME	NAME
_____	_____
TITLE	TITLE
_____	_____
SIGNATURE	SIGNATURE
_____	_____
DATE	DATE

LAWRENCE BERKELEY NATIONAL LABORATORY
Facilities Division / MS: 76R0225

Appendix M

Stormwater Monitoring Implementation Plan

WDID #2 01I002421

Prepared by:
Environmental Services Group
Environment, Health, and Safety Division

October 2026

Lawrence Berkeley National Laboratory, 1 Cyclotron Road, Berkeley, CA 94720

This work was supported by the Director, Office of Science, U.S. Department of Energy
under Contract Number DE-AC02-05CH11231

Amendment Log

Amendment Number	Description	Amendment Date
Revision 0	Original Issue	June 2015
Revision 1	All Sections: Document formatted. Revised Figure 1-2, monitoring point locations	December 2016
Revision 2	Revised Figure 1-2. Updated SIC code. Revised Stormwater Team personnel. Revised monitoring point MP-10 description. Updated personnel for monthly and annual evaluation.	December 2019
Revision 3	Updated Figure 1-2. Updated the description of Lab operations. Updated the Stormwater Pollution Prevention Team. Updated the industrial activity use area monitoring location rationale section and eliminated monitoring Point MP-3. Updated references	November 2022
Revision 4	Updated Sampling Frequency from 4 QSE's to 2 QSE's per reporting year. Updated analytical parameters at MP-2, MP-4, and MP-5	September 2023
Revision 5	Updated Sections: 3.4 Sampling Procedures 6.3 Procedures and Schedules Revised: Figure 1-1LBNL Facility Layout Including Creeks and Watershed Boundaries Added Figures: Figure 2-1 Stormwater Monitoring Point MP-2 At Building 76 Fuel Dispensing Area Figure 2-2 Stormwater Monitoring Point MP-4 and MP-5 at the Hazardous Waste Handling Facility	October 2024
Revision 6	Section 1, updated site address and SWPPP date. Section 2.1.1, updated text. Section 2.2, updated SWPPP date. Section 2.3, added link to Stormwater Collection Workbook. Section 3, revised from two to four QSEs, added a link to the Stormwater Collection Workbook. Section 3.4, revised ESG Procedure 263 document title to Stormwater Monitoring and Creek (VOC) Monitoring. Section 6.3, revised to at least four storm events per season. Section 7, updated references.	November 2025
Revision 7	Section 1 - Updated SWPPP reference. Section 1.1.1 - Updated Figure 1-1. Section 1.1.2 - Updated SWPPP reference. Section 2.2 - Updated vehicle washing. Section 3 - Updated sample collection frequency. Section 7 - Updated SWPPP reference.	October 2026

Contents

1 Introduction 1
1.1 Facility Description 1
1.2 Report Organization and Stormwater Pollution Prevention Team 3
2 Planned Monitoring Activities 4
2.1 Monitoring Location Rationale 4
2.2 Monthly Visual Observations 6
2.3 Sampling Event Observations 7
2.4 Annual Evaluation 7
3 Sampling and Analysis 8
3.1 Permit-Required Analytical Parameters 8
3.2 Pollutant Source Assessment Parameters 8
3.3 Sampling Locations 8
3.4 Sampling Procedures 9
4 Record-Keeping and Reporting Procedures 9
4.1 Sample Event Reporting 9
4.2 Numeric Action Levels and Exceedance Response Actions 9
4.3 Annual Reporting 10
4.4 Supplemental Reporting 10
5 Training 10
6 Quality Assurance / Quality Control and Program Evaluation 11
6.1 Purpose 11
6.2 Quality Assurance / Quality Control Measures 11
6.3 Procedures and Schedules 11
7 References 12

List of Figures

Figure 1-1. LBNL Facility Layout Including Creeks and Watershed Boundaries
Figure 2-1. Stormwater Monitoring Point MP-2 At Building 76 Fuel Dispensing Area
Figure 2-2. Stormwater Monitoring Points MP-4 and MP-5 at the Hazardous Waste Handling Facility

Abbreviations and Acronyms

AST	Aboveground Storage Tank
BMP	Best Management Practice
COD	Chemical Oxygen Demand
DOE	U.S. Department of Energy
DSA	Drum Storage Area
EHS	Environment, Health, and Safety Division
ESG	Environmental Services Group
EWRP	Environment, Waste & Radiation Protection
LBNL	Lawrence Berkeley National Laboratory (also Berkeley Lab)
MP	Monitoring Point
NAL	Numeric Action Level
NPDES	National Pollutant Discharge Elimination System
NSWD	Non-stormwater Discharge
O&G	Oil & Grease
QA/QC	Quality Assurance and Quality Control
QISP	Qualified Industrial Stormwater Practitioner
QSE	Qualifying Storm Event
SFRWQCB	San Francisco Bay Regional Water Quality Control Board
SIC	Standard Industrial Classification
SM	Standard Methods (for the Examination of Water and Wastewater)
SMIP	Stormwater Monitoring Implementation Plan
SWRCB	California State Water Resources Control Board (also Water Board)
SWPPP	Stormwater Pollution Prevention Plan
TSS	Total Suspended Solids
UC	University of California
USEPA	U.S. Environmental Protection Agency
WAA	Waste Accumulation Area
WPC	Work Planning and Control

1 Introduction

This *Stormwater Monitoring Implementation Plan* (SMIP) has been prepared for the Lawrence Berkeley National Laboratory (LBNL, Berkeley Lab) located at One Cyclotron Road in Berkeley, California. The SMIP fulfills the monitoring requirements and monitoring program objectives of the California State Water Resources Control Board (SWRCB) Order No. 2014-0057-DWQ (as amended by Orders 2015-0122-DWQ and 2018-0028-DWQ) *National Pollutant Discharge Elimination System (NPDES) General Permit for Stormwater Discharges Associated with Industrial Activities No. CAS000001* (General Permit).

The SMIP has been prepared to describe monitoring activities for industrial-activity-specific indicators of pollutant contributions from regulated activities at the LBNL site and supports assessments of the performance and effectiveness of best management practices (BMPs), as described in the LBNL *Stormwater Pollution Prevention Plan* (SWPPP; LBNL, 2026) and is an appended document to the SWPPP. The SMIP is designed to focus on the areas of industrial activity that represent potential sources of pollutants that are specifically regulated under the General Permit.

1.1 Facility Description

Lawrence Berkeley National Laboratory (LBNL, Berkeley Lab) is a noncommercial research organization managed by the University of California (UC) on behalf of the U.S. Department of Energy (DOE). Berkeley Lab is a multi-program national laboratory that conducts unclassified research across a wide range of scientific disciplines, with key efforts in fundamental studies of the universe, quantitative biology, nanoscience, new energy systems, and environmental solutions, and the use of integrated computing as a tool for discovery. Berkeley Lab also supports nationwide university-based research by providing national facilities, including the National Center for Electron Microscopy, the Advanced Light Source, the Energy Sciences Network, and the National Energy Research Scientific Computing Center.

1.1.1 Facility Location

Berkeley Lab occupies approximately 200 acres in Berkeley and Oakland, Alameda County, California.

Eighty permanent buildings at the LBNL facility are used for administrative offices, research and development laboratories, site maintenance and operations activities, a cafeteria, a fire response station, construction trade shops (plumbing, electrical, and mechanical), hazardous waste storage, vehicle fueling, site maintenance operations crew yard, and shipping and receiving, storage, and warehouse activities.

Approximately 100 smaller buildings and trailers are used primarily as offices but also house monitoring stations, emergency generators, and chemical and waste storage facilities.

Figure 1-1 shows the overall layout of major buildings and structures at Berkeley Lab, as well as the location of creeks and watershed boundaries. Berkeley Lab's topography slopes south to southwest, and the ground surface elevations range between approximately 500 and 1,000 feet above mean sea level.

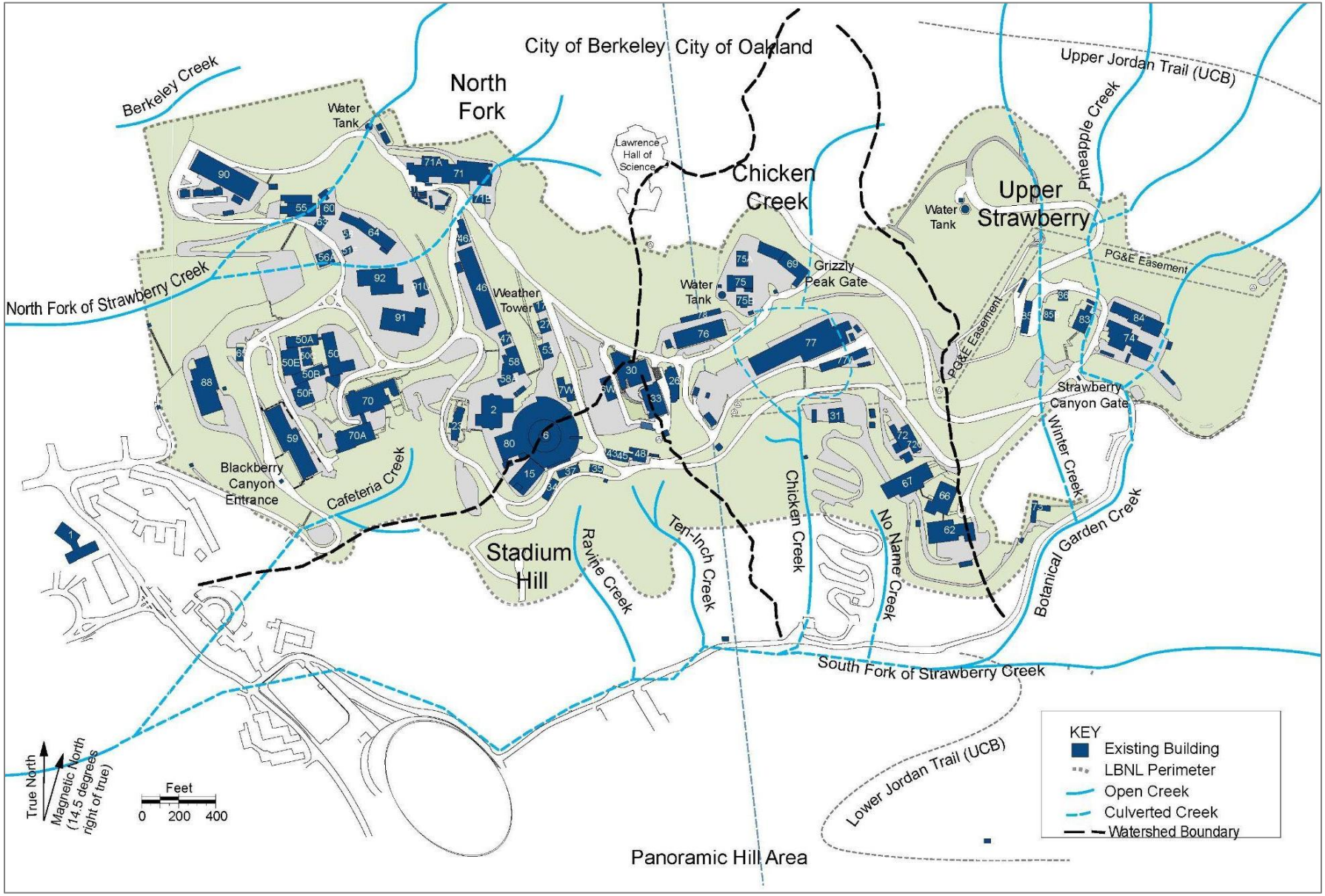

Figure 1-1. LBNL Facility Layout Including Creeks and Watershed Boundaries

1.1.2 Facility Operations

Berkeley Lab is managed by the University of California (UC) for the U.S. Department of Energy (DOE) and conducts basic and applied science research.

Support functions for these activities include handling and storage of hazardous materials; management of hazardous wastes (pre-treatment of waste waters, storage, and/or treatment of hazardous waste in containers and tanks, and packaging and storage of low-level radioactive waste); metal finishing, which is conducted indoors; various fabrication and construction activities; and maintenance and operation of infrastructure and utilities.

Normal operating hours are 8 a.m. to 5 p.m., Monday through Friday, although some research and support functions occur outside of normal operating hours. The LBNL facility is regulated by the General Permit under Standard Industrial Classification (SIC) code 9999 – Nonclassifiable Establishments.

A detailed description of the facility, site activities, and stormwater management programs is presented in the site SWPPP (LBNL, 2026).

1.2 Report Organization and Stormwater Pollution Prevention Team

The SMIP is organized into the following sections:

- A rationale for the monitoring locations
- A description of planned monitoring activities, locations, and procedures
- A presentation of the record maintenance and reporting procedures to be followed
- Stormwater training requirements
- A presentation of the quality assurance and quality control (QA/QC) procedures to be used in obtaining complete and accurate data collection

The Stormwater Pollution Prevention Team consists of the following staff:

Name	Title	Contact Information	Responsibilities
Jim Buehler	ESG Leader	(510) 486-7327 (direct) (916) 804-2388 (mobile) email: jbuehler@lbl.gov	Ensures permit compliance, delegates authority to stormwater program leader. Duly Authorized Representative.
Brendan Mulholland	Stormwater Program Leader	(510) 486-5852 (direct) (510) 381-5584 (mobile) email: bjmulholland@lbl.gov	SWPPP Implementation, SMARTS account administration, stormwater inspections and reporting (see description below).
John Jelinski	Quality Coordinator,	(510) 486-7616 (direct) (510) 517-5378 (mobile) email: jajelinski@lbl.gov	Quality assurance.
Joseph Saadeh	Sample Collection Team Supervisor, Sample Collection Team (Alternate)	(510) 495-2408 (direct) (707) 480-0179 (mobile) email: jsaadeh@lbl.gov	Supervision of Sample Collection Team members. Stormwater sample collection and submittal (alternate).
Kirby Fernando	Sample Collection Team	(510) 486-4278 (direct) (408) 712-6418 (mobile) email: kirbyfernando@lbl.gov	Stormwater sample collection and submittal.
Salman Baig	Sample Collection Team	(510) 495-2408 (direct) (510) 458-8931 (mobile) email: smbaig1@lbl.gov	Stormwater sample collection and submittal.

2 Planned Monitoring Activities

Monitoring of stormwater discharge and evaluation of the storm drainage system are required under the conditions of the General Permit. This SMIP has been prepared to describe how the following objectives will be achieved:

- Verify compliance with discharge prohibitions and limitations specified in the General Permit.
- Aid in evaluating the adequacy of the SWPPP.
- Aid in evaluating the effectiveness of BMPs in removing pollutants in stormwater discharge.
- Support future refinements to the SMIP and SWPPP as needed to respond to observed conditions at the facility.

2.1 Monitoring Location Rationale

The SMIP identifies stormwater sample locations (see Figures 2-1 and 2-2) at potential pollutant sources where industrial activities regulated by the General Permit may be exposed to stormwater. The objective of the monitoring program is to provide accurate measurement of pollutants in stormwater associated with industrial activities, and to evaluate the effectiveness of BMPs in controlling stormwater pollutants.

Waste accumulation areas (WAAs) and drum storage areas (DSAs) were not selected as LBNL monitoring locations because they should be fully or partially covered to avoid exposure to rainfall. Aboveground storage tank (AST) locations were not selected as monitoring locations because ASTs are double-walled with leak detection and their contents should not be exposed to stormwater.

A total of three stormwater monitoring points were selected for collection of stormwater runoff at industrial use areas as described below.

2.1.1 Building 76 Fuel Dispensing Station

Berkeley Lab fuels vehicles at the fuel-dispensing island located outside of Building 76. The dispensing island is equipped with three fuel dispensing pumps – one each for diesel fuel, unleaded gasoline, and E-85 (flex fuel). These dispensers supply fuel to Berkeley Lab's shuttle buses and motor pool vehicles. In accordance with General Permit Sections XI.B. and XI.C. the following representative sampling location was selected:

- **MP-2**. SDI (oil/water separator) at Building 76 fuel dispensing station.

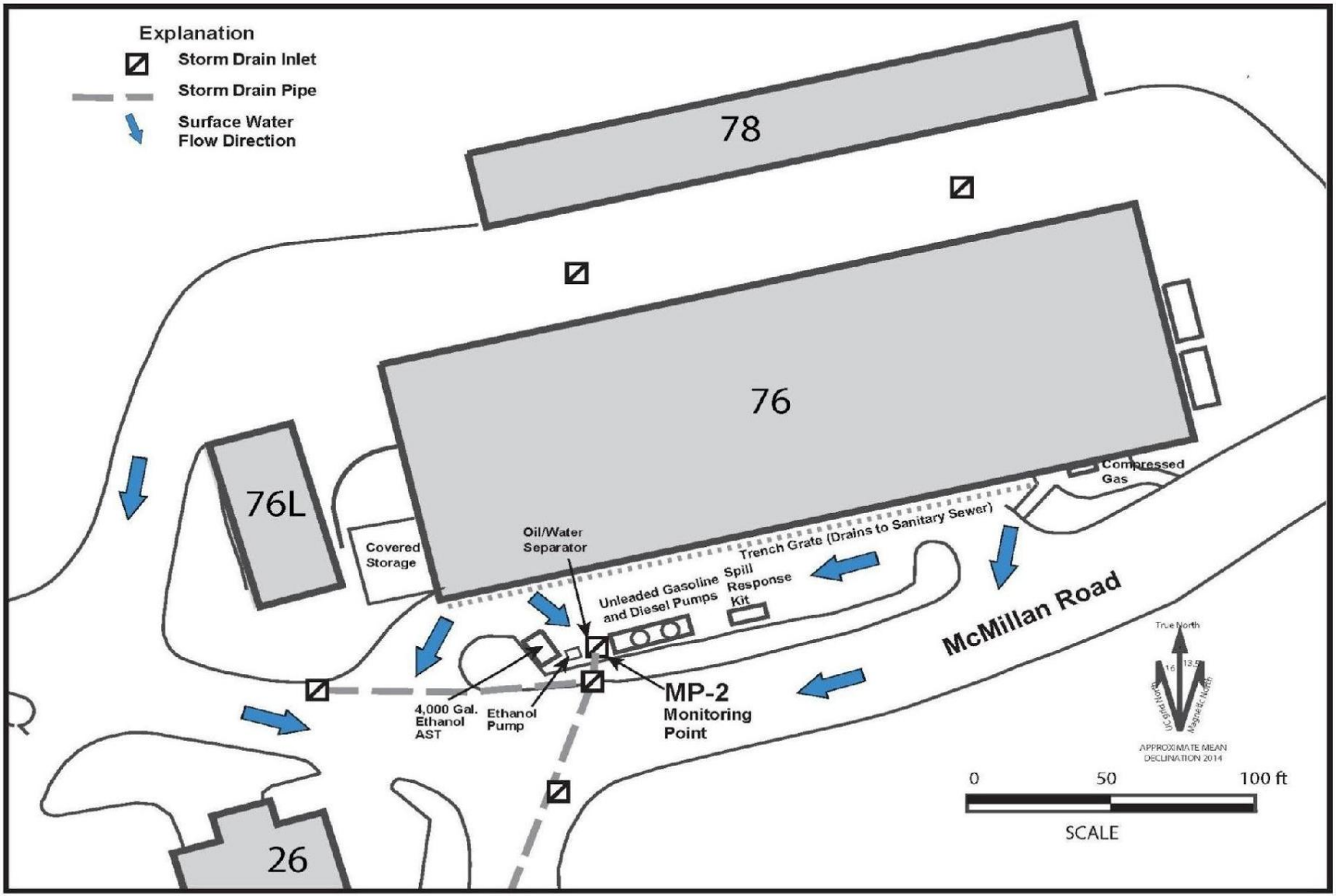

Figure 2-1. Stormwater Monitoring Point MP-2 At Building 76 Fuel Dispensing Area

2.1.2 Building 85 Hazardous Waste Handling Facility

Building 85 is Berkeley Lab's Hazardous Waste Handling Facility, which provides a range of waste management services to LBNL staff. The facility is operated by WMG, which minimizes waste where practical and manages waste generated at Berkeley Lab in compliance with applicable regulations. Materials for disposal are transported to Building 85 for handling and storage from both satellite accumulation areas (SAAs) and waste accumulation areas (WAAs). Upon arrival at Building 85, materials are immediately brought inside the enclosed facility. Stored materials are manifested and prepared for transportation to an off-site disposal facility. Repackaging of materials prior to shipment is conducted inside the building, but there is no destruction or disposal of materials at the facility. In accordance with General Permit Sections XI.B. and XI.C., the following representative sampling locations were selected:

- **MP-4.** Hazardous waste storage and handling at Building 85 lower yard
- **MP-5.** Hazardous waste storage and handling at Building 85 upper yard

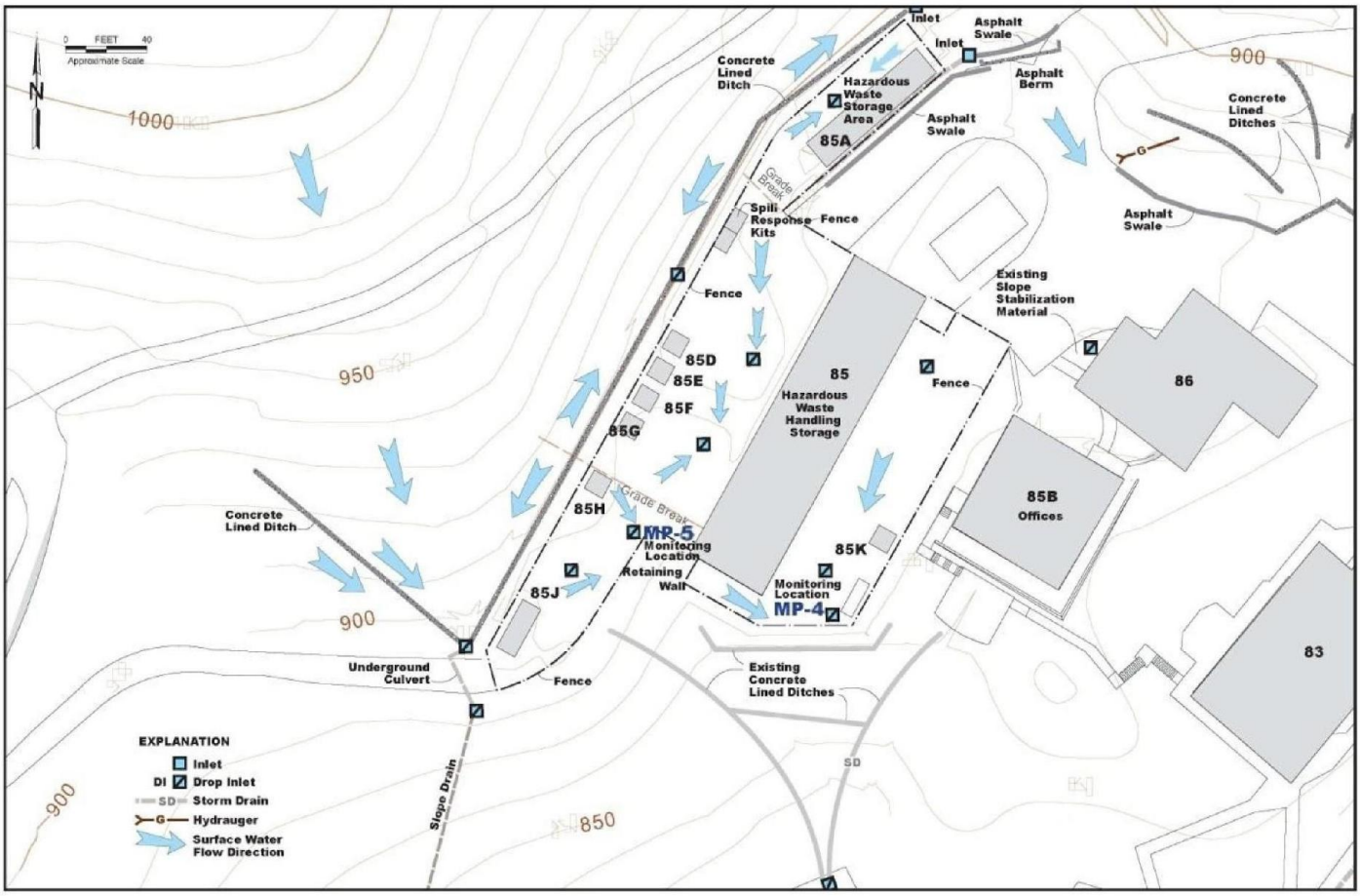

Figure 2-2. Stormwater Monitoring Points MP-4 and MP-5 at the Hazardous Waste Handling Facility

2.2 Monthly Visual Observations

The Stormwater Program Leader performs visual observations at discharge sources and impacted drainage areas on a monthly basis during daylight hours, dry weather, and scheduled facility operating hours. The visual observations are documented by the Stormwater Program Leader on the Monthly Visual Observation form.

Authorized non-stormwater discharges (NSWDs) at Berkeley Lab include fire hydrant flushing, landscape

watering, general maintenance work, water line breaks, safety shower/eyewash testing and operation, air conditioning condensates, uncontaminated groundwater reaching the surface (e.g., hydraugers), vehicle washing, and utility vault pump-outs, as described in detail in the SWPPP (LBNL, 2026).

Unauthorized NSWDs at Berkeley Lab include wash waters from buildings, cooling tower spray, closed loop process cooling water, dust control waters, drilling and monitoring well development waters, contaminated groundwater reaching the surface (e.g., a release from a groundwater treatment system), low-conductivity cooling water, sewer line breaks, small maintenance and repair work cleanup, and water line breaks where appropriate BMPs have not been implemented.

The NSWD inspections consist of making visual observations of the NSWD points to verify adequate conveyance to storm drains (if authorized), absence of soil erosion, and absence of contact between NSWDs and materials or equipment with the potential to contain significant quantities of pollutants.

2.3 Sampling Event Observations

Berkeley Lab's Stormwater Sample Collection Team members shall document visual observations at stormwater discharge locations for each sample collection event performed during the wet-weather season (October 1 to May 30). Visual observations and/or sample collections are required of stormwater discharges only under the following conditions:

- During daylight hours
- During scheduled LBNL operating hours
- Preceded by at least 48 hours without a stormwater discharge from any discharge area
- Within 4 hours from the start of discharge at any discharge location

The inspections will include visual observations of stormwater runoff to evaluate the presence of floating or suspended materials, oil and grease, discoloration, turbidity, or other signs of pollutant impact to stormwater runoff. Records will be maintained of observation dates, locations observed, observations, and response taken, if needed, to reduce or prevent pollutants in stormwater discharges. Observations will also be made to assess the proper performance of stormwater collection and diversion structures (e.g., surface drains and concrete lined ditches). The visual observations will be recorded by the Stormwater Sample Collection Team members on the Stormwater Collection Workbook.

2.4 Annual Evaluation

In accordance with Section XV of the General Permit, Berkeley Lab's Stormwater Program Leader shall conduct one Annual Evaluation for each reporting year (July 1 to June 30). If any Annual Evaluation is conducted fewer than 8 months or more than 16 months from the previous Annual Evaluation, justification for doing so shall be documented on the evaluation form. The Stormwater Program Leader shall revise the SWPPP, as appropriate, and implement the revisions within 90 days of the most recent Annual Evaluation. At a minimum, Annual Evaluations shall consist of:

- A review of all sampling, visual observation, and inspection records conducted during the previous reporting year
- An inspection of all areas of industrial activity and associated potential pollutant sources for evidence of, or the potential for, pollutants entering the stormwater conveyance system
- An inspection of all drainage areas previously identified as having no exposure to industrial activities and materials in accordance with the definitions in General Permit Section XVII
- An inspection of equipment needed to implement the BMPs

- An inspection of any BMPs
- A review and effectiveness assessment of all BMPs for each area of industrial activity and associated potential pollutant sources to determine whether the BMPs are properly designed, implemented, and effective in reducing and preventing pollutants in industrial stormwater discharges and authorized NSWDs
- An assessment of any other factors needed to comply with the requirements in General Permit Section XVI.B

Inspections shall be documented on the Annual Site Stormwater Inspection form and maintained by the Stormwater Program Leader.

3 Sampling and Analysis

Berkeley Lab's Stormwater Sample Collection Team members will collect stormwater samples from one qualifying storm event (QSE) within the first half of each reporting year (July 1 to December 31), and one QSE within the second half of each reporting year (January 1 to June 30). Sampling frequency can be reduced if results from four consecutive QSEs (including multiple reporting years) do not exceed any instantaneous or annual Numeric Action Levels, and the facility is otherwise in compliance.

A QSE is defined as a precipitation event that produces a discharge for at least one drainage area and is preceded by at least 48 hours of no discharge to any drainage area. Stormwater samples may be collected up to 4 hours after the stormwater runoff has begun. If a precipitation event begins overnight or outside of normal facility operating hours, stormwater samples will be collected within 4 hours after normal facility operating hours have begun. Berkeley Lab is not required to collect a sample or conduct visual observations if weather conditions pose safety risks (e.g., during a lightning storm).

During a QSE, if there is insufficient runoff to obtain a stormwater sample at a designated monitoring point(s), the Stormwater Sample Collection Team will photo-document and also provide written documentation of insufficient flow on the Stormwater Collection Workbook. An explanation of why a sample was not collected at a designated monitoring point will be provided in the annual report.

3.1 Permit-Required Analytical Parameters

The General Permit requires the analysis of three parameters for stormwater samples at each monitoring location. These parameters are pH, total suspended solids (TSS), and oil and grease (O&G). Stormwater samples will be analyzed for the standard stormwater parameters as stipulated in Section XI.B.6 of the General Permit:

- pH using Standard Method (SM) 4500H+B
- TSS using SM 2540-D
- O&G using U.S. Environmental Protection Agency (EPA) Method 1664A

3.2 Pollutant Source Assessment Parameters

Section 3.5 in the SWPPP describes the pollutant source assessments for specific industrial activities conducted at Berkeley Lab. Based on inspections, interviews, and a review of current housekeeping, storage, and materials management, no additional PSA-derived analytical parameters were identified at Berkeley Lab's industrial use areas.

3.3 Sampling Locations

Samples will be collected on site at representative discharge locations where industrial activities have the potential to expose stormwater to pollutants. The sample locations have been selected to provide stormwater analytical data that is representative of the industrial activities conducted at Berkeley Lab.

Stormwater samples will be collected from the monitoring points in accordance with the procedures outlined below.

3.4 Sampling Procedures

Stormwater Sample Collection Team members will collect samples using either a clean sample bailer, scoop, or portable sampler into laboratory-supplied sample containers.

The Stormwater Sample Collection Team measures pH using a temperature-corrected pH meter, in lieu of analytical laboratory analysis because of short holding times. The pH meter is calibrated and maintained in accordance with the manufacturer's specifications. Calibrations, sample measurements, and internal QA/QC checks are documented on the appropriate form, in accordance with LBNL procedures.

Analytical methods to be used are listed in the table below.

Stormwater Monitoring Implementation Plan Parameters

Monitoring Point	Parameter	Analytical Method	Minimum Sample Container	Preservative	Hold Time
All locations: MP-2, MP-4, MP-5	pH	SM 4500H+B	(1) 125 mL HDPE	cool to <6°C	15 minutes
	TSS	SM 2540-D	(1) 1 L HDPE	cool to <6°C	7 days
	O&G	EPA 1664A	(1) 1 L amber glass	HCl, cool to <6°C	28 days

Abbreviations:
EPA = Environmental Protection Agency
HCl = hydrochloric acid
HDPE = high-density polyethylene
mL = milliliter
SM = Standard Method

ESG Procedure 263, *Stormwater Monitoring and Creek (VOC) Monitoring*, describes in detail the collection of stormwater samples. Samples will be processed, packaged, and shipped in accordance with ESG Procedure 254, *Sample Processing, Packaging, and Transport*.

4 Record-Keeping and Reporting Procedures

Records and plans (including this SMIP and all documents incorporated by reference) are maintained in accessible form by ESG. These records of all inspections and sampling events will be retained in accordance with regulatory and DOE record-keeping and archival requirements for a period of at least 5 years.

4.1 Sample Event Reporting

Berkeley Lab will submit sampling and analytical results from all sampling events via the SMARTS database within 30 days of obtaining all analytical results from each sampling event. Method detection limits will be provided when analytical results are reported by the laboratory as either a "non-detect" or less than the detection limit. A value of zero will not be reported. Additionally, for analytical results from samples that are reported by the laboratory as below the minimum level (the reporting limit) but above the method detection limit, the minimum levels will be entered into SMARTS.

4.2 Numeric Action Levels and Exceedance Response Actions

The General Permit provides requirements to evaluate, report, and act on stormwater monitoring data.

For every sampling event, the analytical results of each parameter must be assessed relative to Numeric

Action Levels (NALs), which are the benchmark criteria in the U.S. EPA's Multi Sector Industrial Permit and have been adopted by the SWRCB. Analytical results for each parameter must be averaged for each monitoring year and compared against the annual NAL. Analytical results for every parameter must be compared to the instantaneous maximum NAL. The first time a test result exceeds an NAL, Berkeley Lab's facility status will change from Baseline to Level 1. In this case, a Level 1 Exceedance Response Action (ERA) Evaluation must be performed and a Level 1 ERA Report must be submitted that identifies additional BMPs to be implemented to prevent future exceedances. Once those BMPs are implemented and four consecutive samples are below the NAL, the facility may return to Baseline status.

If the same NAL is exceeded while its status is Level 1, the facility status changes to Level 2, triggering a Level 2 ERA Action Plan and Technical Report. If the investigation demonstrates that the exceedances resulted from non-industrial or natural background sources, the General Permit does not allow the facility to return to Baseline status.

To be effective, the SMIP must ensure the collection and presentation of accurate, representative data that characterize Berkeley Lab's stormwater runoff. The ultimate goal is to document the reduction in stormwater pollutants that industrial sources at the LBNL facility may be contributing to runoff. If contaminant levels decrease or if levels are within acceptable Annual and Instantaneous NAL benchmarks as listed in the table below, this will demonstrate that both the SWPPP and the SMIP are fulfilling their respective functions – the former by achieving the reduction or elimination of stormwater pollutants through BMPs, and the latter by documenting that achievement.

Parameter Benchmark Values

Parameter	Annual NAL (mg/L)	Instantaneous NAL (mg/L)
pH	NA	<6.00 > 9.00
Total suspended solids	100	400
Oil and grease	15	25

4.3 Annual Reporting

A dated and certified annual report will be submitted via SMARTS by July 15 after each reporting year using the standardized SMARTS format and checklist. The checklist indicates whether permit compliance has been achieved and whether all applicable permit requirements have been met. The annual report will provide an explanation for any noncompliance issues, and will identify revisions made to the SWPPP within the reporting year. The annual report includes a certification stating that Berkeley Lab complies with the General Permit. The Legally Responsible Party or Duly Authorized Representative will sign the certification.

4.4 Supplemental Reporting

If sampling results indicate a discharge has caused or contributed to an exceedance of the General Permit requirements, a report will be submitted to the SFRWQCB within 60 days summarizing the BMPs currently being implemented and additional BMPs that will be implemented to address the exceedance. The report will also include an implementation schedule for the additional BMPs. After the report is approved, the SWPPP will be revised to incorporate the additional BMPs and any additional monitoring required within a timely manner, but in no case more than 90 days after the exceedance of the General Permit requirements is indicated.

5 Training

Berkeley Lab's Stormwater Program Leader is a Qualified Industrial Stormwater Practitioner (QISP) who provides stormwater training as a quality control component of the stormwater pollution prevention program at Berkeley Lab.

Training is required for facility personnel responsible for the following activities:

- Implementing BMPs and other activities identified in the SWPPP
- Conducting inspections, sampling, and visual observations
- Managing stormwater

Training will address such topics as spill response, good housekeeping, material handling procedures, and actions necessary to implement all BMPs identified in the SWPPP. Training is conducted by the Stormwater Program Leader, who is experienced in water quality monitoring and sampling, instrument maintenance and calibration, data management, and the regulatory framework.

The training schedule is identified in the SWPPP. Training records are maintained in the Work Planning and Control (WPC) training management system. As conditions or parameters change or as the scope of operations increases, additional training will be designed and implemented.

6 Quality Assurance / Quality Control and Program Evaluation

6.1 Purpose

The SMIP has been developed to assist in implementing data collection activities and to generate thorough and accurate data. Where possible, this objective will be accomplished with data collection forms. The forms provide a "fill-in-the-blank" approach so that each item of interest can be addressed during the sampling events and inspections; if it is not addressed, an appropriate explanation can be provided. In addition, the Stormwater Pollution Prevention Team and Sample Collection Team members are trained in the proper sampling methods and documentation.

6.2 Quality Assurance / Quality Control Measures

The SMIP is part of the overall environmental compliance program at Berkeley Lab. In keeping with the objectives of the SMIP, the following QA/QC measures have been adopted:

- All monitoring is conducted by personnel trained in stormwater sampling.
- Laboratory reporting limits should be below their respective Data Quality Objectives for the chemicals analyzed.
- Records are maintained certifying that all field-monitoring instruments are calibrated and maintained in accordance with the manufacturers' instructions and LBNL procedures.
- Only state-certified laboratories with approved QA/QC programs for the analysis of samples are used, and such analysis is documented via chain-of-custody forms and laboratory reports.
- pH measurements are recorded with field-monitoring equipment because of short holding times. Verification of data quality is completed in accordance with U.S. EPA Data Quality Objectives Guidelines.
- The Stormwater Program Leader will review activities and confirm that all elements of the SMIP have been completed.

The purpose of periodic evaluation is to monitor, in an ongoing and systematic fashion, the effectiveness of the SMIP in meeting the objectives stated in the General Permit. The General Permit objectives are to produce accurate, representative data on the amount of pollutants, if any, discharged by the LBNL facility in its stormwater runoff, and to use the data to demonstrate a reduction in such pollutants via measures and practices described in the SWPPP.

6.3 Procedures and Schedules

When the laboratory results are received, the Stormwater Program Leader or designee performs a review for completeness and notes any change in chemical concentrations. The Stormwater Program Leader will

validate the results and address any unusual or unexpected results, in accordance with ESG Procedure 268, *Environmental Sample Tracking and Data Management*.

During the dry season, stormwater monitoring activities are limited to monthly inspections and observations of nonstormwater discharges, if any. During the wet season, monthly observation forms, stormwater sampling forms, and results of any sampling analyses will be reviewed. The Stormwater Program Leader will also review the monitoring design to evaluate whether all activities that need to be conducted are completed.

Since rainfall and stormwater discharge may not occur during regular working hours, emphasis is placed on collecting samples from at least four storm events per season. During the dry season, activities will be reviewed once per month to confirm that observations are completed, since there will most likely be no sampling results.

The Stormwater Program Leader will report periodically to upper management on the status of stormwater monitoring; however, any anomalies in monitoring results will be reported immediately. The Stormwater Program Leader will monitor the status of the program by reviewing the data at least once per month. The records of observations and results of analyses will become part of the permanent record and provide the basis for the Annual Evaluation, which is due to the SFRWQCB on July 15 each year. The periodic program evaluation is the basis for review of the SMIP, which is also found in the Annual Evaluation, and for any revisions or amendments to the SMIP.

7 References

Lawrence Berkeley National Laboratory, Environmental Services Group, *Environmental Sample Tracking and Data Management*, ESG Procedure 268.

Lawrence Berkeley National Laboratory, Environmental Services Group, *Sample Processing, Packaging, and Transport*, ESG Procedure 254.

Lawrence Berkeley National Laboratory, Environmental Services Group, *Stormwater Pollution Prevention Plan for Industrial Activities*.

Lawrence Berkeley National Laboratory, Environmental Services Group, *Stormwater Monitoring and Creek (VOC) Monitoring*, ESG Procedure 263.

State Water Resources Control Board, Water Quality Order No. 2014-0057-DWQ, as amended by Orders 2015-0122-DWQ and 2018-0028-DWQ. National Pollutant Discharge Elimination System (NPDES) General Permit for Storm Water Discharges Associated with Industrial Activities.

U.S. Environmental Protection Agency (EPA), Final Modification of the National Pollutant Discharge Elimination System (NPDES) Storm Water Multi-Sector General Permit for Industrial Activities; Termination of the EPA NPDES Storm Water Baseline Industrial General Permit, *Federal Register*, vol. 65, no. 210 (October 30, 2000).

U.S. Environmental Protection Agency (EPA), *Guidance on Systematic Planning Using the Data Quality Objectives Process*, EPA QA/G-4 (February 2006).